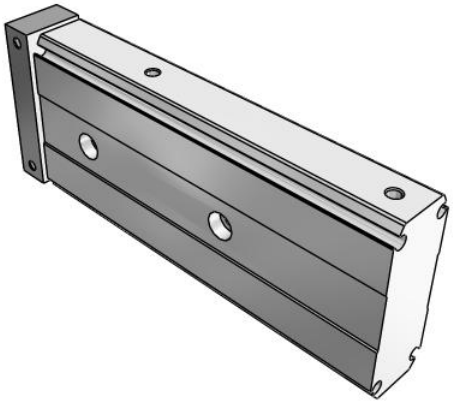

CXSJ, Dual Rod Cylinder, Compact Type

CXSJL20-75

Datasheet

General series information

- Dual rod cylinder, compact type
- Slide bearing or ball bushing bearing
- Bore size (mm): 6, 10, 15, 20, 25, 32
- Standard strokes (mm): 10, 20, 30, 40, 50, 75, 100
- Auto switches available
- Made to Order additionally released.

Double-acting, single-rod cylinder

Standard specifications

Bearing Type	L (Ball Bush Bearing)
Bore Size	20 mm
Thread Type	Rc (or M Thread for 6 to 25 Bore)
Piping	Standard Porting
Stroke	75 mm
Auto Switch	No Switch
Lead Wire or Pre-wired Connector	0.5 m (Or None in the Case of No Switch)
Number	2 pcs. (Or None in the Case of No Switch)
Option	None
Pressure medium	Air (non-lube)
Maximum operating pressure	0.7 MPa
Minimum operating pressure	0.05 MPa
Proof pressure	1.05 MPa
Maximum ambient temperature	60 ºC
Minimum ambient temperature	-10 ºC
Number of pneumatic connections	2 pcs.
Mode of operation of drive	Double acting

Specifications are subject to change without prior notice and any obligation on the part of the manufacturer.

SMC CORPORATION Zuazobidea 14, 01012, Vitoria-Gasteiz, Álava +34 945184100 +34 945184126 www.smc.eu support.marketingeurope@smc.com

Type of cushioning	Rubber Bumper
Type of stroke reduction	Unilaterally retracted
Port size	M5
Piston speed	30 to 700 mm/s
Stroke adjustable range	0 to – 5 mm compared to the standard stroke
Weight	0.544 Kg

Specifications are subject to change without prior notice and any obligation on the part of the manufacturer.

SMC CORPORATION Zuazobidea 14, 01012, Vitoria-Gasteiz, Álava +34 945184100 +34 945184126 www.smc.eu support.marketingeurope@smc.com

Dimensions

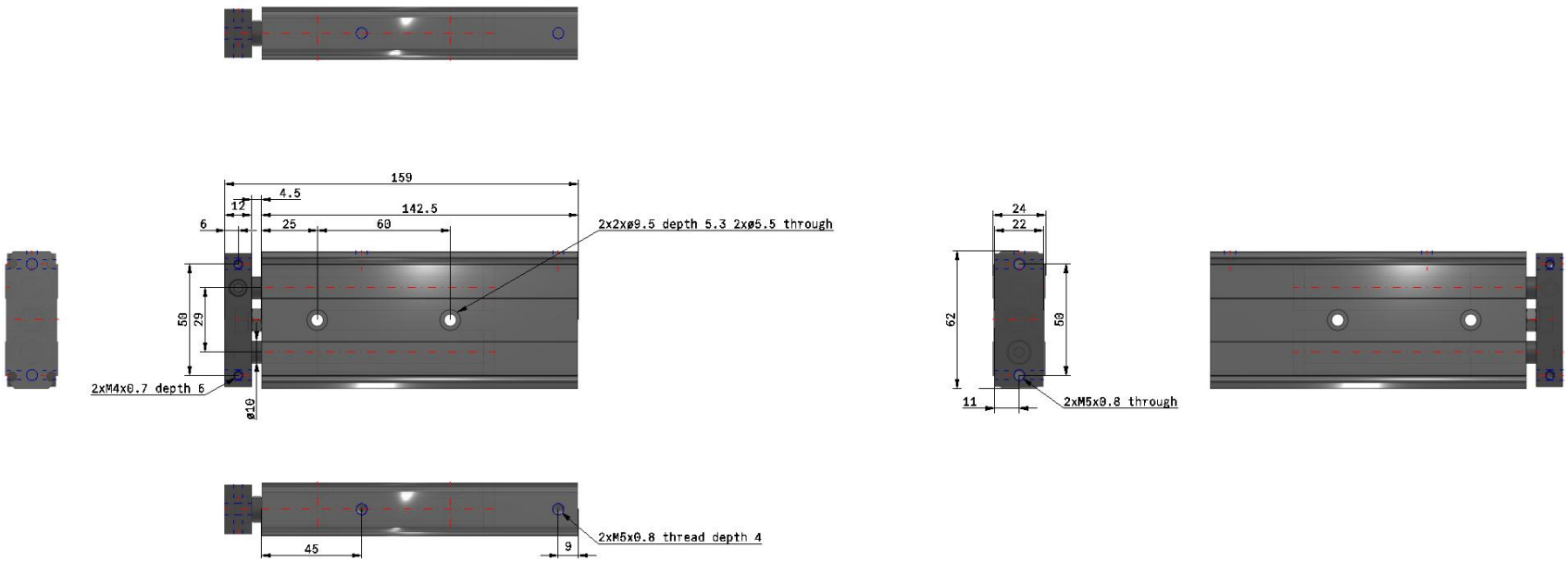

Specifications are subject to change without prior notice and any obligation on the part of the manufacturer.

SMC CORPORATION Zuazobidea 14, 01012, Vitoria-Gasteiz, Álava +34 945184100 +34 945184126 www.smc.eu support.marketingeurope@smc.com

Constructions

CXSJL (Ball bushing bearing)

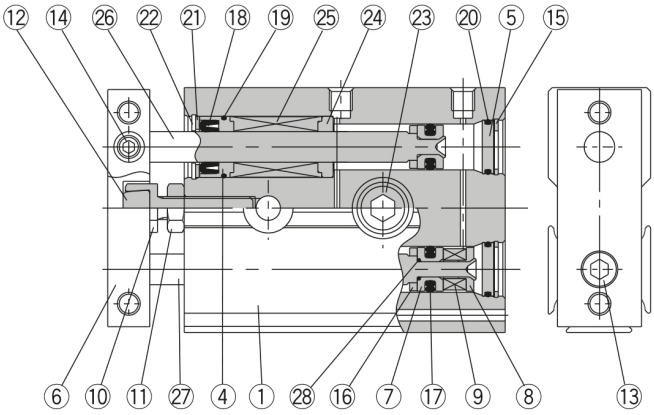

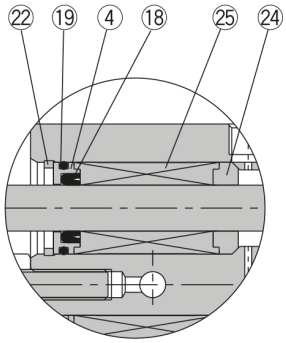

Rod cover

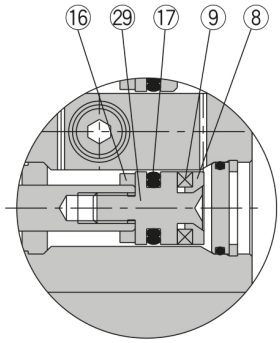

Piston rod B-side piston

Parts list

No.	Description	Material	Note
1	**Housing**	Aluminum alloy	Hard anodized
2	**Piston rod A**	Carbon steel Note)	Hard chrome plated
3	**Piston rod B**	Carbon steel Note)	Hard chrome plated
4	**Rod cover/Bearing**	Aluminum alloy	
5	**Head cover**	Aluminum alloy	Anodized
6	**Plate**	Aluminum alloy	Glossy, self-coloring hard anodized
7	**Piston A**	Aluminum alloy	Chromated
8	**Piston B**	Aluminum alloy	Chromated
9	**Magnet**	Magnetic material	
10	**Bumper bolt**	Carbon steel	Nickel plated
11	**Hexagon nut**	Carbon steel	Nickel plated
12	**Bumper**	Polyurethane	
13	**Hexagon socket head cap screw**	Chromium steel	Nickel plated
14	**Hexagon socket head set screw**	Chromium steel	Nickel plated
15	**Snap ring**	Special steel	Nickel plated

Note) Stainless steel for CXSJM6.

No.	Description	Material	Note
16	**Bumper B**	Polyurethane	
17	**Piston seal**	NBR	
18	**Rod seal**	NBR	
19	**O-ring**	NBR	
20	**O-ring**	NBR	
21	**Seal retainer**	Stainless steel	
22	**Snap ring B**	Special steel	Nickel plated
23	**Bolt holder**	Stainless steel	
24	**Bearing spacer**	Aluminum alloy	
25	**Ball bushing**	—	
26	**Piston rod A**	Special steel	Hard chrome plated
27	**Piston rod B**	Special steel	Hard chrome plated
28	**O-ring**	NBR	
29	**Piston C**	Stainless steel	

Specifications are subject to change without prior notice and any obligation on the part of the manufacturer.

SMC CORPORATION Zuazobidea 14, 01012, Vitoria-Gasteiz, Álava +34 945184100 +34 945184126 www.smc.eu support.marketingeurope@smc.com

Additional information

Catalogue	CXSJ_EU.pdf
Operation manuals	cxsj_op_man_cxsj-om0002h.pdf

Specifications are subject to change without prior notice and any obligation on the part of the manufacturer.

SMC CORPORATION Zuazobidea 14, 01012, Vitoria-Gasteiz, Álava +34 945184100 +34 945184126 www.smc.eu support.marketingeurope@smc.com