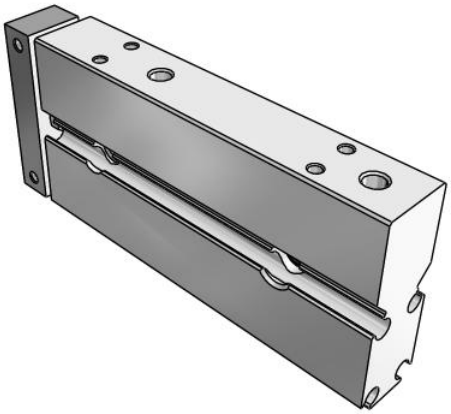

# CXSJ, Dual Rod Cylinder, Compact Type
## CXSJL10-40

Datasheet

## General series information

- Dual rod cylinder, compact type
- Slide bearing or ball bushing bearing
- Bore size (mm): 6, 10, 15, 20, 25, 32
- Standard strokes (mm): 10, 20, 30, 40, 50, 75, 100
- Auto switches available
- Made to Order additionally released.

*Double-acting, single-rod cylinder*

## Standard specifications

| | |
|---|---|
| Bearing Type | L (Ball Bush Bearing) |
| Bore Size | 10 mm |
| Thread Type | Rc (or M Thread for 6 to 25 Bore) |
| Piping | Standard Porting |
| Stroke | 40 mm |
| Auto Switch | No Switch |
| Lead Wire or Pre-wired Connector | 0.5 m (Or None in the Case of No Switch) |
| Number | 2 pcs. (Or None in the Case of No Switch) |
| Option | None |
| Pressure medium | Air (non-lube) |
| Maximum operating pressure | 0.7 MPa |
| Minimum operating pressure | 0.1 MPa |
| Proof pressure | 1.05 MPa |
| Maximum ambient temperature | 60 ºC |
| Minimum ambient temperature | -10 ºC |
| Number of pneumatic connections | 2 pcs. |
| Mode of operation of drive | Double acting |

*Specifications are subject to change without prior notice and any obligation on the part of the manufacturer.*



**SMC CORPORATION** Zuazobidea 14, 01012, Vitoria-Gasteiz, Álava +34 945184100 +34 945184126 www.smc.eu support.marketingeurope@smc.com

| | |
|---|---|
| Type of cushioning | Rubber Bumper |
| Type of stroke reduction | Unilaterally retracted |
| Port size | M5 |
| Piston speed | 30 to 800 mm/s |
| Stroke adjustable range | 0 to – 5 mm compared to the standard stroke |

Specifications are subject to change without prior notice and any obligation on the part of the manufacturer.



SMC CORPORATION Zuazobidea 14, 01012, Vitoria-Gasteiz, Álava +34 945184100 +34 945184126 www.smc.eu support.marketingeurope@smc.com

# Dimensions

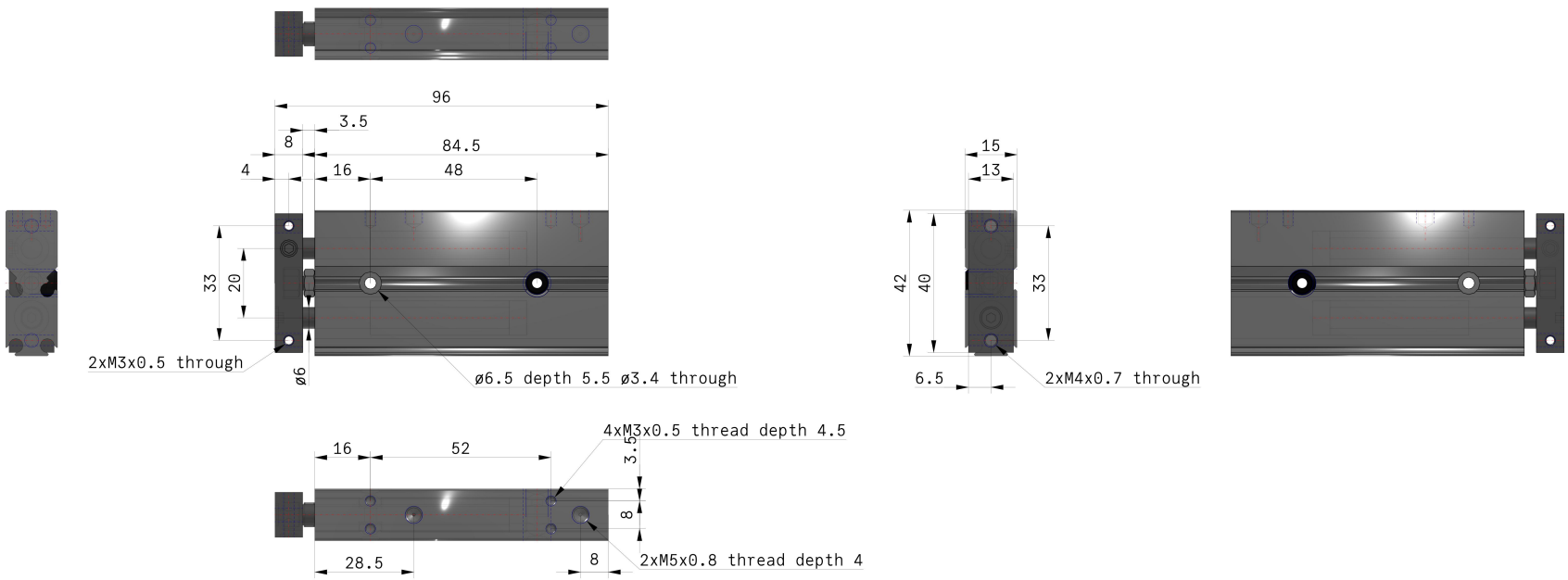


Specifications are subject to change without prior notice and any obligation on the part of the manufacturer.



SMC CORPORATION Zuazobidea 14, 01012, Vitoria-Gasteiz, Álava +34 945184100 +34 945184126 www.smc.eu support.marketingeurope@smc.com

# Constructions

### CXSJL (Ball bushing bearing)

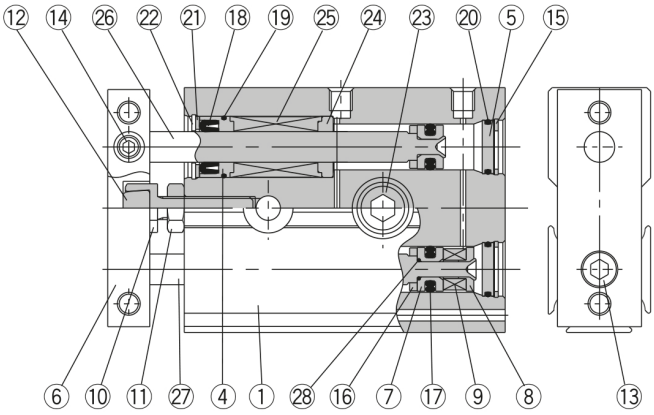


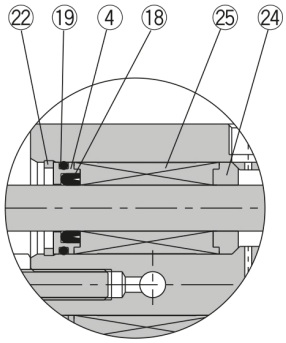


Rod cover

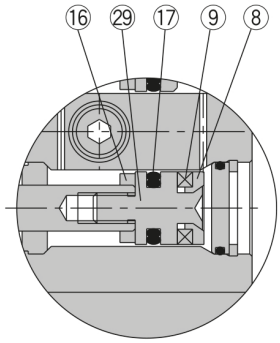


Piston rod B-side piston

### Parts list

| No. | Description | Material | Note |
|---|---|---|---|
| 1 | **Housing** | Aluminum alloy | Hard anodized |
| 2 | **Piston rod A** | Carbon steel Note) | Hard chrome plated |
| 3 | **Piston rod B** | Carbon steel Note) | Hard chrome plated |
| 4 | **Rod cover/Bearing** | Aluminum alloy | |
| 5 | **Head cover** | Aluminum alloy | Anodized |
| 6 | **Plate** | Aluminum alloy | Glossy, self-coloring hard anodized |
| 7 | **Piston A** | Aluminum alloy | Chromated |
| 8 | **Piston B** | Aluminum alloy | Chromated |
| 9 | **Magnet** | Magnetic material | |
| 10 | **Bumper bolt** | Carbon steel | Nickel plated |
| 11 | **Hexagon nut** | Carbon steel | Nickel plated |
| 12 | **Bumper** | Polyurethane | |
| 13 | **Hexagon socket head cap screw** | Chromium steel | Nickel plated |
| 14 | **Hexagon socket head set screw** | Chromium steel | Nickel plated |
| 15 | **Snap ring** | Special steel | Nickel plated |

Note) Stainless steel for CXSJM6.

| No. | Description | Material | Note |
|---|---|---|---|
| 16 | **Bumper B** | Polyurethane | |
| 17 | **Piston seal** | NBR | |
| 18 | **Rod seal** | NBR | |
| 19 | **O-ring** | NBR | |
| 20 | **O-ring** | NBR | |
| 21 | **Seal retainer** | Stainless steel | |
| 22 | **Snap ring B** | Special steel | Nickel plated |
| 23 | **Bolt holder** | Stainless steel | |
| 24 | **Bearing spacer** | Aluminum alloy | |
| 25 | **Ball bushing** | — | |
| 26 | **Piston rod A** | Special steel | Hard chrome plated |
| 27 | **Piston rod B** | Special steel | Hard chrome plated |
| 28 | **O-ring** | NBR | |
| 29 | **Piston C** | Stainless steel | |

*Specifications are subject to change without prior notice and any obligation on the part of the manufacturer.*



**SMC CORPORATION** Zuazobidea 14, 01012, Vitoria-Gasteiz, Álava +34 945184100 +34 945184126 www.smc.eu support.marketingeurope@smc.com

## Additional information

| | |
|---|---|
| Catalogue | CXSJ_EU.pdf |
| Operation manuals | cxsj_op_man_cxsj-om0002h.pdf |

Specifications are subject to change without prior notice and any obligation on the part of the manufacturer.



SMC CORPORATION Zuazobidea 14, 01012, Vitoria-Gasteiz, Álava +34 945184100 +34 945184126 www.smc.eu support.marketingeurope@smc.com