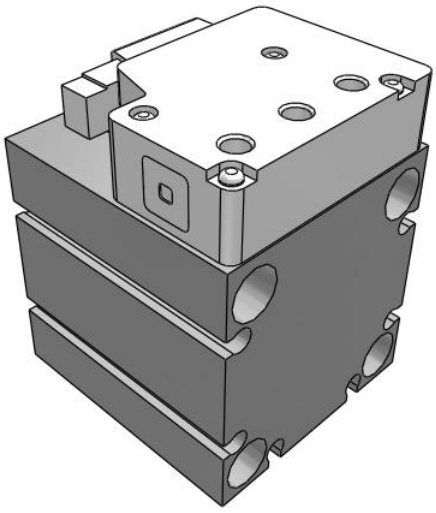

CVQ (ø32), Compact Cylinder with Solenoid Valve

CVQB32-15-5MO

Datasheet

General series information

- Space saving.
- Energy saving.
- Labour saving.
- Improved response speed.
- Different piping directions possible.
- Bore size (mm): 32, 40, 50, 63.
- Stroke (mm): 5~100.

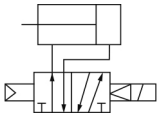

Double acting: single rod compact cylinder with solenoid valve

Standard specifications

Mounting	B (Through Hole)
Bore Size	32 mm
Stroke	15
Option	Standard (Rod End Female Thread)
Auto Switch	No Switch
Lead Wire or Prewired Connector	0.5m (Or None in the Case of No Switch)
Number	2 pcs. (Or None in the Case of No Switch)
Rated Voltage	5 (24 VDC)
Electrical Entry	MO (M Plug Connector Without Connector)
Surge Voltage Suppressor	W/O Surge Voltage Suppressor
Manual Override	Non-Locking Push Type
Piping	Standard
Port Thread	Rc (32 & 40 Bore: M5; 50 & 63 Bore Rc)
Maximum operating pressure	0.7 MPa
Minimum operating pressure	0.15 MPa
Proof pressure	1.0 MPa

Specifications are subject to change without prior notice and any obligation on the part of the manufacturer.

SMC United Kingdom +34 945184126 sales@smc.uk

Type of cushioning	Rubber bumper
Actuation type	Double-acting, single-rod
Type of actuation	2 position single
Electrical entry	M-type plug connector
Manual override	Non-looking push type / Locking slotted type
Enclosure	Dustproof
Power Consumption	0.35 (With light: 0.4) W
Fluid	Air (Non-lube)
Rated coil voltage	24/12(VDC)
Allowable voltage range	±10% of the rated voltage
Indicator light	LED
Ambient and fluid temperature	-10 - 50ºC
Stroke length tolerance	0 - + 1.0 mm
F449 - Rod_end_thread_tolerance	JIS Class 2
F450 - Mounting	Through-hole / Both ends tapped
Piston speed	50 - 500 mm/s
F454 - Mounting orientation	Unrestricted (based on cylinder mounting orientation)
Pilot exhaust	Main/Pilot valve common exhaust type
Surge voltage suppressor	Diode (Non-polar type: Varistor)
Weight	0.440 Kg

Specifications are subject to change without prior notice and any obligation on the part of the manufacturer.

SMC United Kingdom +34 945184126 sales@smc.uk

Dimensions

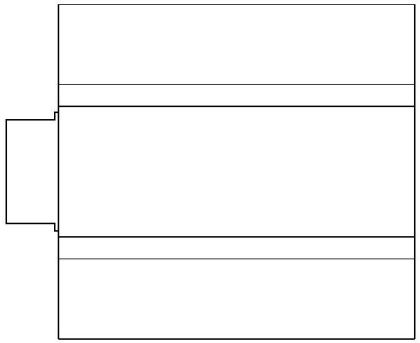

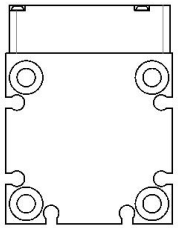

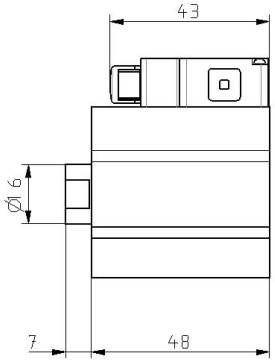

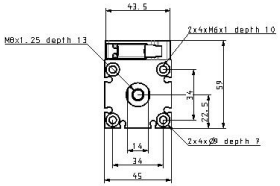

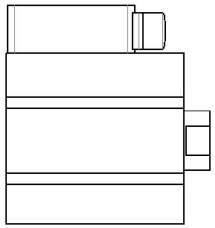

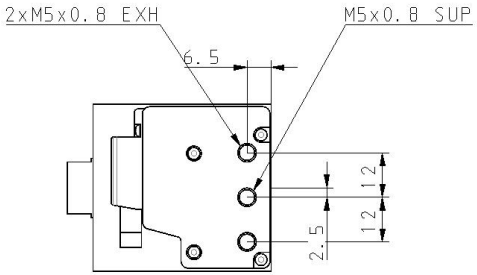

Specifications are subject to change without prior notice and any obligation on the part of the manufacturer.

SMC United Kingdom +34 945184126 sales@smc.uk

Constructions

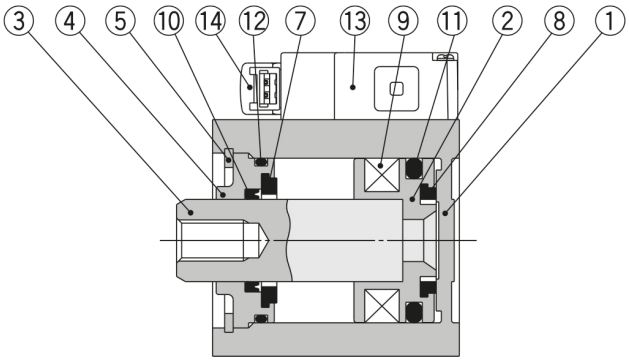

Basic Type

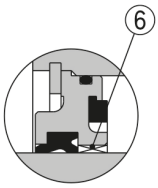

Ø 50, Ø 63

With boss in head end

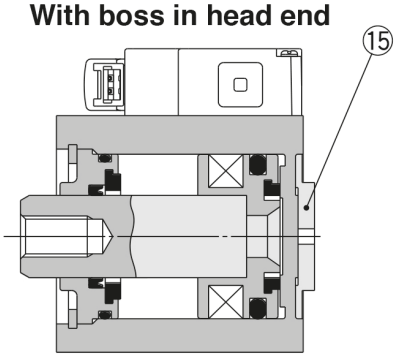

Component Parts

No.	Description	Material	Note
1	**Cylinder tube**	Aluminum alloy	Hard anodised
2	**Piston**	Aluminum alloy	Chromated
3	**Piston rod**	Carbon steel	Hard chrome plated
4	**Collar**	Aluminum alloy casting	Ø 50, Ø 63, chromate coating
		Aluminum alloy	Anodised
5	**Retaining ring**	Carbon tool steel	Phosphate coated
6	**Bushing**	Bearing alloy	Ø 50, Ø 63
7	**Bumper A**	Urethane	
8	**Bumper B**	Urethane	
9	**Magnet**	—	
10	**Rod seal**	NBR	
11	**Piston seal**	NBR	
12	**Gasket**	NBR	
13	**Solenoid valve**	—	
14	**Pilot valve**	—	
15	**Boss ring**	Aluminum alloy	Hard anodised
16	**Rod end nut**	Carbon steel	Nickel plated

Rod end male thread

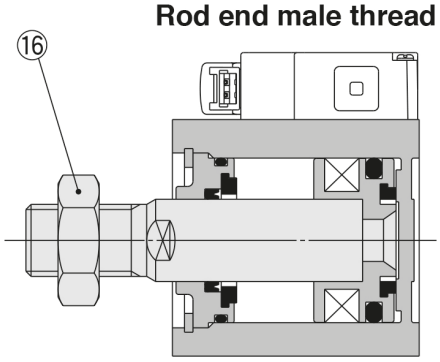

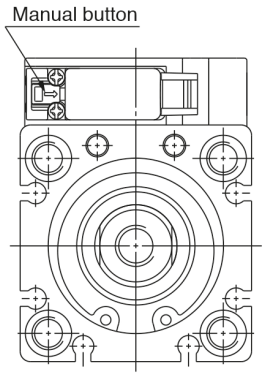

Specifications are subject to change without prior notice and any obligation on the part of the manufacturer.

SMC United Kingdom +34 945184126 sales@smc.uk

Additional information

Catalogue	CVQ-B_EU.pdf
Declaration of conformity	newDoC_CVQx_TF1U012UK.pdf newDoC_CVQx_TF1V309EN.pdf newDoC_CVQx_TF1U012EN.pdf

Specifications are subject to change without prior notice and any obligation on the part of the manufacturer.

SMC United Kingdom +34 945184126 sales@smc.uk