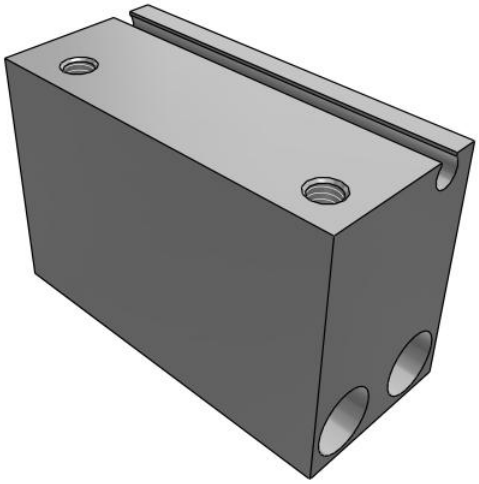

# C(D)UJ, Miniature Free Mount Cylinder

## CUJS20-35D

Datasheet

## General series information

- Miniature free mount
- Space saving compact cylinder
- Available in 4mm to 20mm bore size.

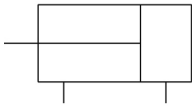

*Double-acting, single-rod cylinder*

## Standard specifications

| | |
|---|---|
| Clean Series | Without Clean Series |
| Magnet | None |
| Mounting Direction | S (Axial Mounting) |
| Bore Size | 20 |
| Stroke | 35mm |
| Action | D (Double Acting) |
| Rod End Thread | Rod End Female Thread (w/o Thread for ø4) |
| Auto Switch | No Switch |
| Lead Wire or Prewired Connector | 0.5m (Or None in the Case of No Switch) |
| Number | 2 pcs. (Or None in the Case of No Switch) |
| Pressure medium | Air |
| Maximum operating pressure | 0.7 MPa |
| Minimum operating pressure | 0.05 MPa |
| Proof pressure | 1.05 MPa |
| Theoretical cylinder force, advance stroke (at 0.5 MPa) | 157 N |
| Theoretical cylinder force, return stroke (at 0.5 MPa) | 118 N |
| Type of cushioning | Rubber Bumper |
| Femalethread of rod end | Standard |
| Ambient and fluid temperature | -10 °C - 60 °C |
| Stroke length tolerance | 0 - +1.0 |

*Specifications are subject to change without prior notice and any obligation on the part of the manufacturer.*



**SMC CORPORATION** Zuazobidea 14, 01012, Vitoria-Gasteiz, Álava +34 945184100 +34 945184126 www.smc.eu support.marketingeurope@smc.com

| | |
|---|---|
| F449 - Rod_end_thread_tolerance | JIS class 2 |
| F450 - Mounting | Through-hole |
| Piston speed | 50 - 500 mm/s |
| Weight | 0.066 Kg |

Specifications are subject to change without prior notice and any obligation on the part of the manufacturer.



SMC CORPORATION Zuazobidea 14, 01012, Vitoria-Gasteiz, Álava +34 945184100 +34 945184126 www.smc.eu support.marketingeurope@smc.com

# Dimensions

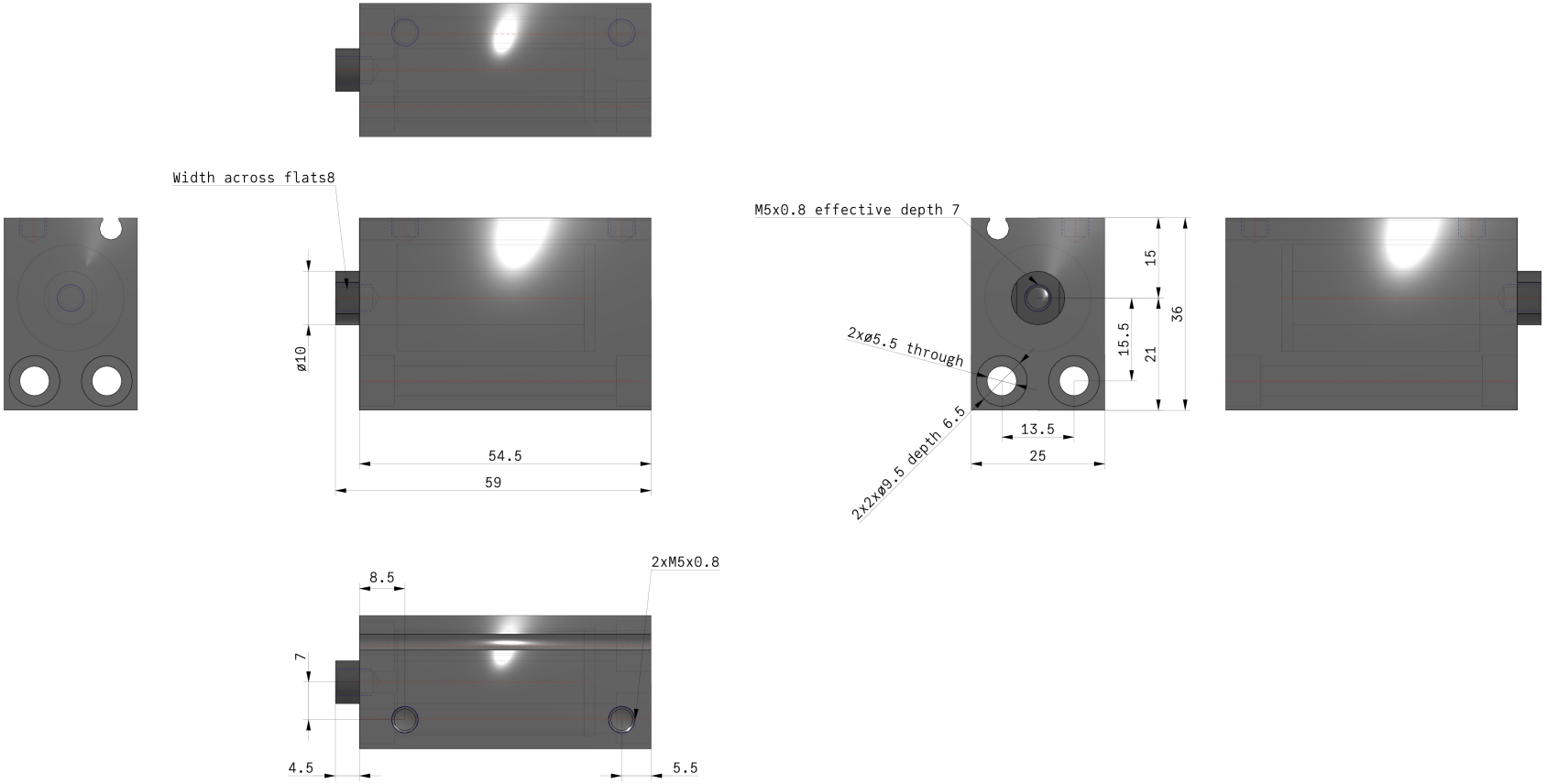


Specifications are subject to change without prior notice and any obligation on the part of the manufacturer.



SMC CORPORATION Zuazobidea 14, 01012, Vitoria-Gasteiz, Álava +34 945184100 +34 945184126 www.smc.eu support.marketingeurope@smc.com

# Constructions

## Double Acting

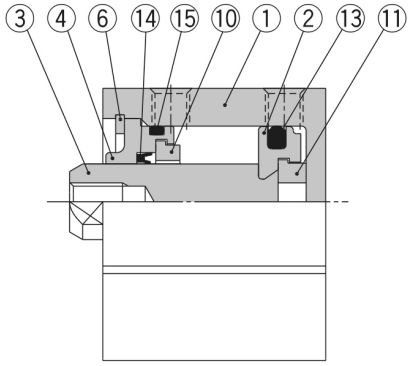


**Without magnet**

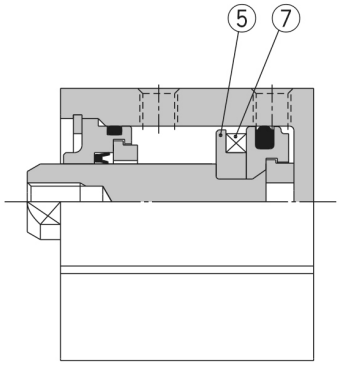


**Built-in magnet**

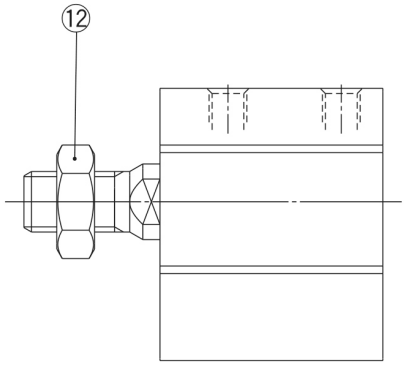


**Rod end male threaded**

## Component Parts

| No. | Description | Material | Note |
|---|---|---|---|
| 1 | **Cylinder tube** | Aluminum alloy | Hard anodized |
| 2 | **Piston** | Aluminum alloy | Trivalent chromated |
| 3 | **Piston rod** | Stainless steel | |
| 4 | **Collar** | Aluminum alloy | Hard anodized |
| 5 | **Magnet holder** | Aluminum alloy | Trivalent chromated |
| 6 | **Retaining ring** | Steel for special applications | Phosphate coated |
| 7 | **Magnet** | — | |
| 8 | **Return spring** | Steel wire | Zinc trivalent chromated |
| 9 | **Element** | Bronze casted | (for Ø 12, Ø 16) |
| | **Plug with fixed restrictor** | Structural steel | Nickel plated (for Ø 20) |
| 10 | **Damper A** | Resin | |
| 11 | **Damper B** | Resin | |
| 12 | **Rod end nut** | Steel wire | Nickel plated |
| 13 | **Piston seal** | NBR | |
| 14 | **Rod seal** | NBR | |
| 15 | **O-ring** | NBR | |

*Specifications are subject to change without prior notice and any obligation on the part of the manufacturer.*



**SMC CORPORATION** Zuazobidea 14, 01012, Vitoria-Gasteiz, Álava +34 945184100 +34 945184126 www.smc.eu support.marketingeurope@smc.com

## Additional information

| | |
|---|---|
| Catalogue | CUJ-C_EU.pdf |
| Operation manuals | cuj_cuj_-om0001j.pdf |

Specifications are subject to change without prior notice and any obligation on the part of the manufacturer.



SMC CORPORATION Zuazobidea 14, 01012, Vitoria-Gasteiz, Álava +34 945184100 +34 945184126 www.smc.eu support.marketingeurope@smc.com