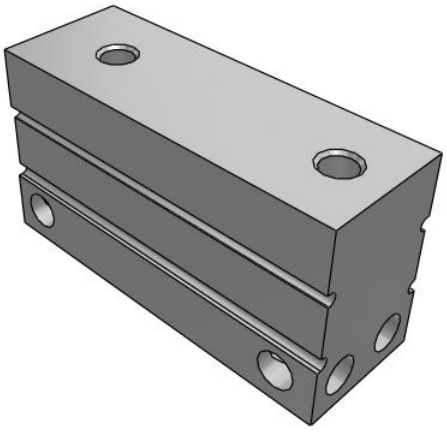

C(D)UJ, Miniature Free Mount Cylinder
CUJB4-15D

Datasheet

General series information

- Miniature free mount
- Space saving compact cylinder
- Available in 4mm to 20mm bore size.

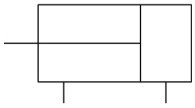

Double-acting, single-rod cylinder

Standard specifications

Clean Series	Without Clean Series
Magnet	None
Mounting Direction	B (Lateral Mounting)
Bore Size	4
Stroke	15 mm
Action	D (Double Acting)
Rod End Thread	Rod End Female Thread (w/o Thread for ø4)
Auto Switch	No Switch
Lead Wire or Prewired Connector	0.5m (Or None in the Case of No Switch)
Number	2 pcs. (Or None in the Case of No Switch)
Pressure medium	Air
Maximum operating pressure	0.7 MPa
Minimum operating pressure	0.15 MPa
Proof pressure	1.05 MPa
Theoretical cylinder force, advance stroke (at 0.5 MPa)	6.28 N
Theoretical cylinder force, return stroke (at 0.5 MPa)	4.71 N
Femalethread of rod end	Standard
Lubrication	Non-lube
Ambient and fluid temperature	-10 °C - 60 °C
Stroke length tolerance	0 - +0.5

Specifications are subject to change without prior notice and any obligation on the part of the manufacturer.

SMC CORPORATION Zuazobidea 14, 01012, Vitoria-Gasteiz, Álava +34 945184100 +34 945184126 www.smc.eu emcmarketing@smc.smces.es

F449 - Rod_end_thread_tolerance	JIS class 2
F450 - Mounting	Through-hole
Piston speed	50 - 500 mm/s
Weight	0.011 Kg

Specifications are subject to change without prior notice and any obligation on the part of the manufacturer.

SMC CORPORATION Zuazobidea 14, 01012, Vitoria-Gasteiz, Álava +34 945184100 +34 945184126 www.smc.eu emcmarketing@smc.smces.es

Dimensions

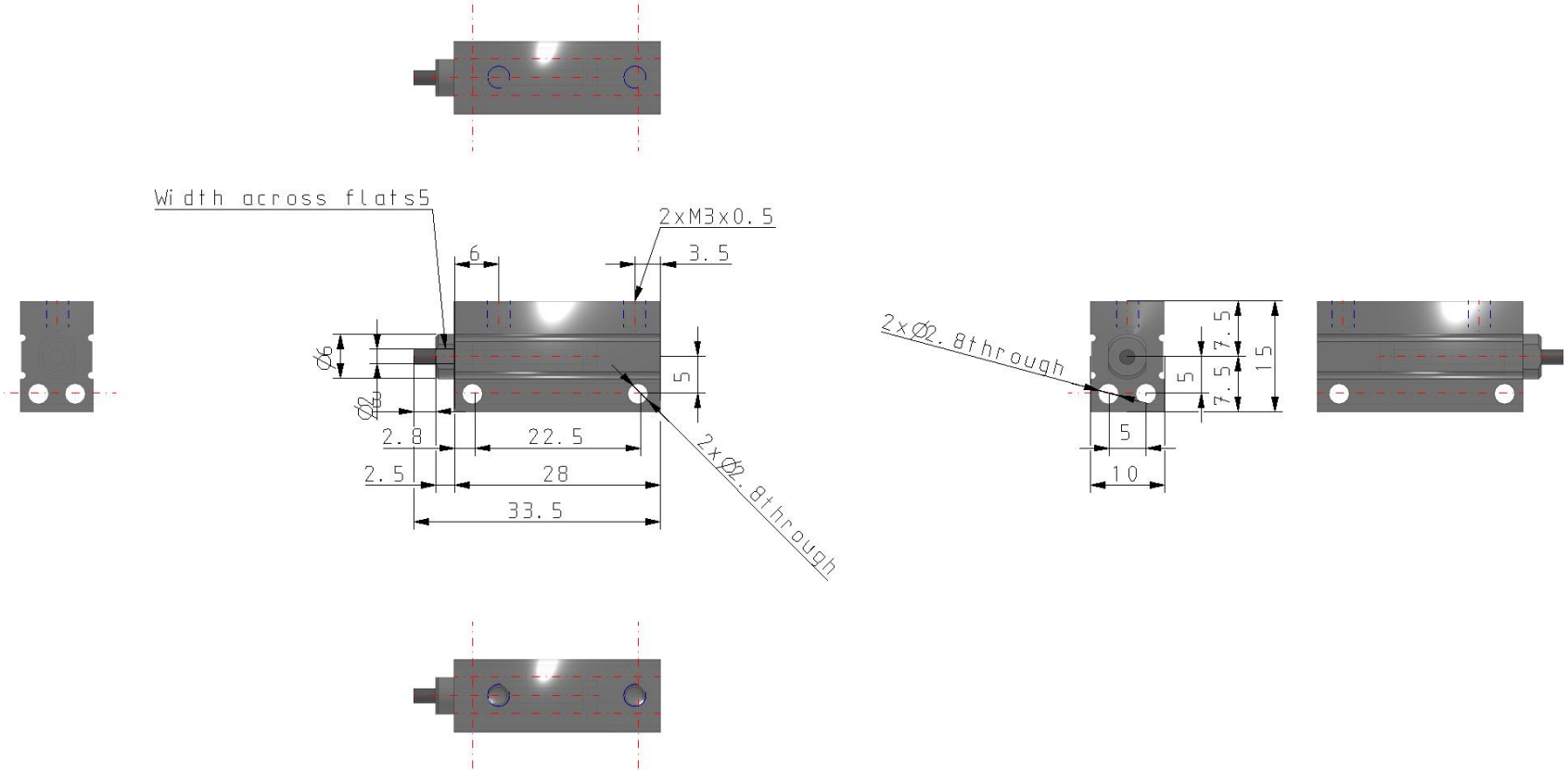

Specifications are subject to change without prior notice and any obligation on the part of the manufacturer.

SMC CORPORATION Zuazobidea 14, 01012, Vitoria-Gasteiz, Álava +34 945184100 +34 945184126 www.smc.eu emcmarketing@smc.smces.es

Constructions

Double Acting

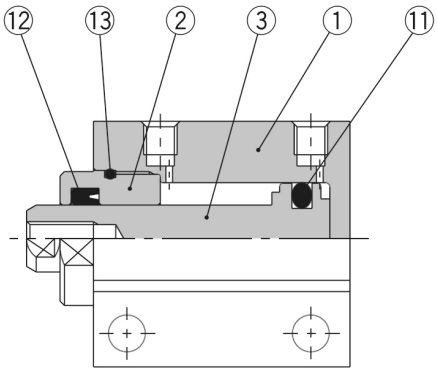

Without magnet

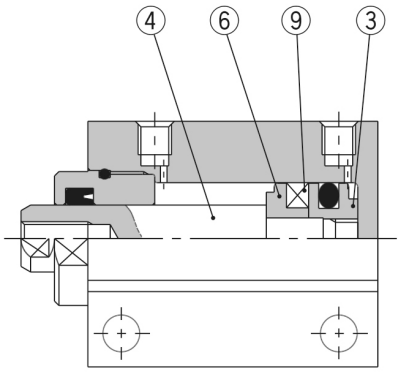

Built-in magnet

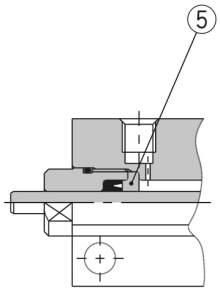

Ø 4

Component Parts

No.	Description		Material	Note
1	**Cylinder tube**		Aluminum alloy	Hard anodized
2	**Rod cover**		Copper alloy	Electroless nickel plated
3	**Piston**	**Without switch**	Stainless steel	
		With switch	Aluminum alloy	Chromated
4	**Piston rod**		Stainless steel	
5	**Seal retainer**		Aluminum alloy	Chromated (CUJB4 only)
6	**Magnet retainer**		Aluminum alloy	Chromated
7	**Return spring**		Piano wire	
8	**Bronze element**		Sintered metallic BC	
9	**Magnet**		—	
10	**Rod end nut**		Iron	Nickel plated
11	**Piston seal**		NBR	
12	**Rod seal**		NBR	
13	**Tube gasket**		NBR	

Specifications are subject to change without prior notice and any obligation on the part of the manufacturer.

SMC CORPORATION Zuazobidea 14, 01012, Vitoria-Gasteiz, Álava +34 945184100 +34 945184126 www.smc.eu emcmarketing@smc.smces.es

Additional information

Catalogue	CUJ-C_EU.pdf
Operation manuals	cuj_cuj_-om0001j.pdf

Specifications are subject to change without prior notice and any obligation on the part of the manufacturer.

SMC CORPORATION Zuazobidea 14, 01012, Vitoria-Gasteiz, Álava +34 945184100 +34 945184126 www.smc.eu emcmarketing@smc.smces.es