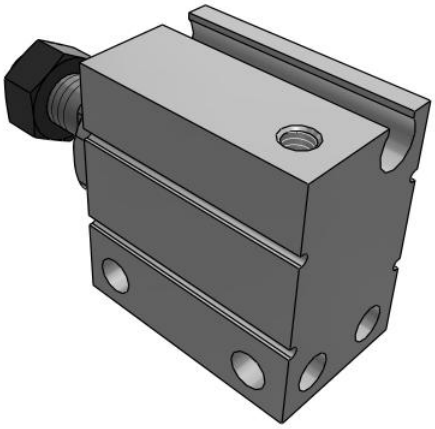

C(D)UJ, Miniature Free Mount Cylinder

CUJB10-8SM

Datasheet

General series information

- Miniature free mount
- Space saving compact cylinder
- Available in 4mm to 20mm bore size.

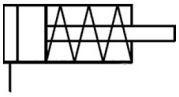

Single-acting cylinder, single piston rod, return stroke by spring

Standard specifications

Clean Series	Without Clean Series
Magnet	None
Mounting Direction	B (Lateral Mounting)
Bore Size	10
Stroke	8mm
Action	S (Single Acting Spring Return)
Rod End Thread	M (Rod End Male Thread)
Auto Switch	No Switch
Lead Wire or Prewired Connector	0.5m (Or None in the Case of No Switch)
Number	2 pcs. (Or None in the Case of No Switch)
Pressure medium	Air
Maximum operating pressure	0.7 MPa
Minimum operating pressure	0.2 MPa
Proof pressure	1.05 MPa
Theoretical cylinder force, advance stroke (at 0.5 MPa)	39.26 N
Theoretical cylinder force, return stroke (at 0.5 MPa)	25.13 N
Malethread of rod end	Male Thread
Ambient and fluid temperature	-10 °C - 60 °C
Stroke length tolerance	0 - +0.5
F449 - Rod_end_thread_tolerance	JIS class 2

Specifications are subject to change without prior notice and any obligation on the part of the manufacturer.

SMC CORPORATION Zuazobidea 14, 01012, Vitoria-Gasteiz, Álava +34 945184100 +34 945184126 www.smc.eu support.marketingeurope@smc.com

F450 - Mounting	Through-hole
Piston speed	50 - 500 mm/s

Specifications are subject to change without prior notice and any obligation on the part of the manufacturer.

SMC CORPORATION Zuazobidea 14, 01012, Vitoria-Gasteiz, Álava +34 945184100 +34 945184126 www.smc.eu support.marketingeurope@smc.com

Dimensions

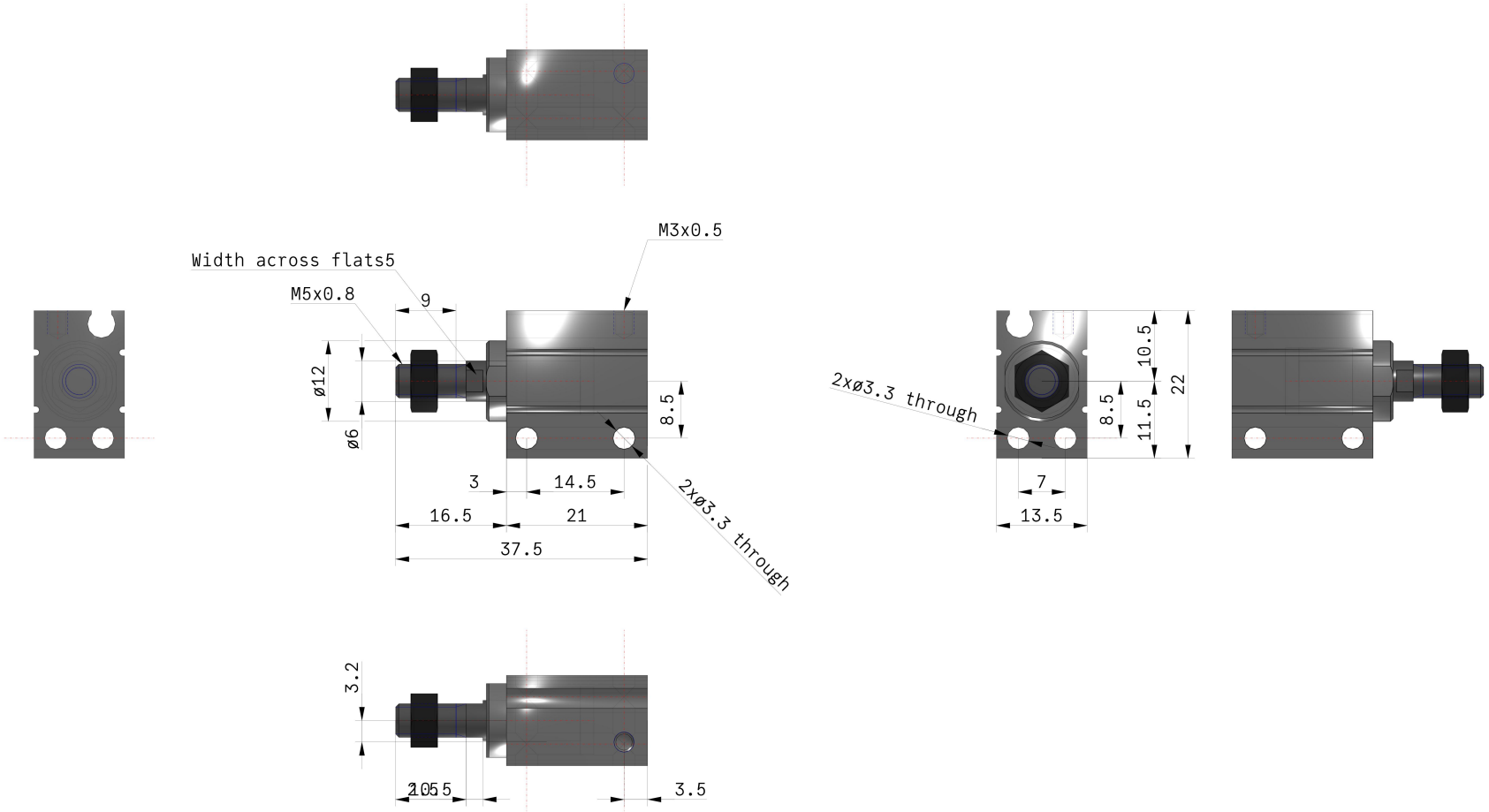

Specifications are subject to change without prior notice and any obligation on the part of the manufacturer.

SMC CORPORATION Zuazobidea 14, 01012, Vitoria-Gasteiz, Álava +34 945184100 +34 945184126 www.smc.eu support.marketingeurope@smc.com

Constructions

Single Acting, Spring Return

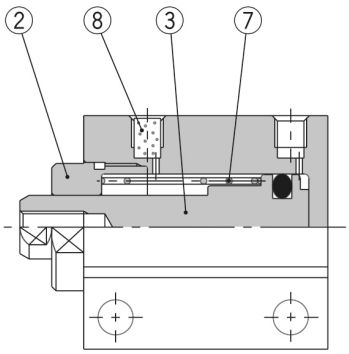

Without magnet

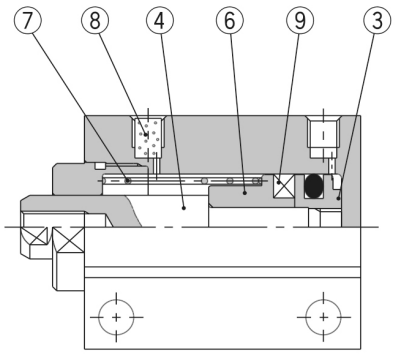

Built-in magnet

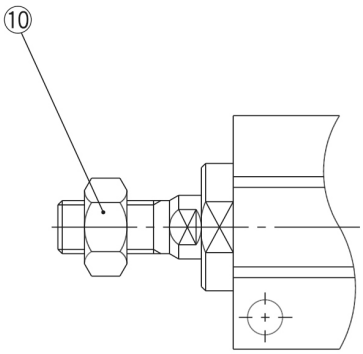

Rod end male threaded

Component Parts

No.	Description		Material	Note
1	**Cylinder tube**		Aluminum alloy	Hard anodized
2	**Rod cover**		Copper alloy	Electroless nickel plated
3	**Piston**	**Without switch**	Stainless steel	
		With switch	Aluminum alloy	Chromated
4	**Piston rod**		Stainless steel	
5	**Seal retainer**		Aluminum alloy	Chromated (CUJB4 only)
6	**Magnet retainer**		Aluminum alloy	Chromated
7	**Return spring**		Piano wire	
8	**Bronze element**		Sintered metallic BC	
9	**Magnet**		—	
10	**Rod end nut**		Iron	Nickel plated
11	**Piston seal**		NBR	
12	**Rod seal**		NBR	
13	**Tube gasket**		NBR	

Specifications are subject to change without prior notice and any obligation on the part of the manufacturer.

SMC CORPORATION Zuazobidea 14, 01012, Vitoria-Gasteiz, Álava +34 945184100 +34 945184126 www.smc.eu support.marketingeurope@smc.com

Additional information

Catalogue	CUJ-C_EU.pdf
Operation manuals	cuj_cuj_-om0001j.pdf

Specifications are subject to change without prior notice and any obligation on the part of the manufacturer.

SMC CORPORATION Zuazobidea 14, 01012, Vitoria-Gasteiz, Álava +34 945184100 +34 945184126 www.smc.eu support.marketingeurope@smc.com