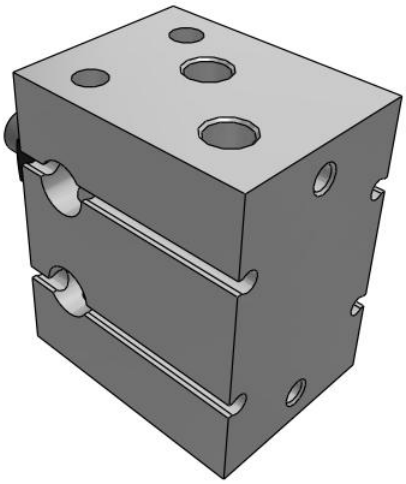

C(D)U, Free Mount Cylinder, Double Acting

CU32TF-10D

Datasheet

General series information

- Bore sizes from 6mm to 32mm available
- Stroke lengths up to 50mm
- Any surfaces can be used for mounting
- Space saving
- Auto-switch capable

Double-acting, single-rod cylinder

Standard specifications

Magnet	None
Bore Size	32 mm
Port Thread	TF (G1/8)
Stroke	10mm
Auto Switch	No Switch
Lead Wire or Prewired Connector	0.5 m (Or None in the Case of No Switch)
Number	2 pcs. (Or None in the Case of No Switch)
Maximum operating pressure	0.7 MPa
Minimum operating pressure	0.05 MPa
Proof pressure	1.05 MPa
Theoretical cylinder force, advance stroke (at 0.5 MPa)	402 N
Theoretical cylinder force, return stroke (at 0.5 MPa)	346 N
Type of cushioning	Rubber Bumper
Piston rod end	Male Thread
Lubrication	Non-lube
Fluid	Air
Ambient and fluid temperature	-10 - 70 °C
Thread Tolerance	JIS Class2

Specifications are subject to change without prior notice and any obligation on the part of the manufacturer.

SMC CORPORATION Zuazobidea 14, 01012, Vitoria-Gasteiz, Álava +34 945184100 +34 945184126 www.smc.eu emcmarketing@smc.smces.es

Piston speed	50 - 500 mm/s

Specifications are subject to change without prior notice and any obligation on the part of the manufacturer.

SMC CORPORATION Zuazobidea 14, 01012, Vitoria-Gasteiz, Álava +34 945184100 +34 945184126 www.smc.eu emcmarketing@smc.smces.es

Dimensions

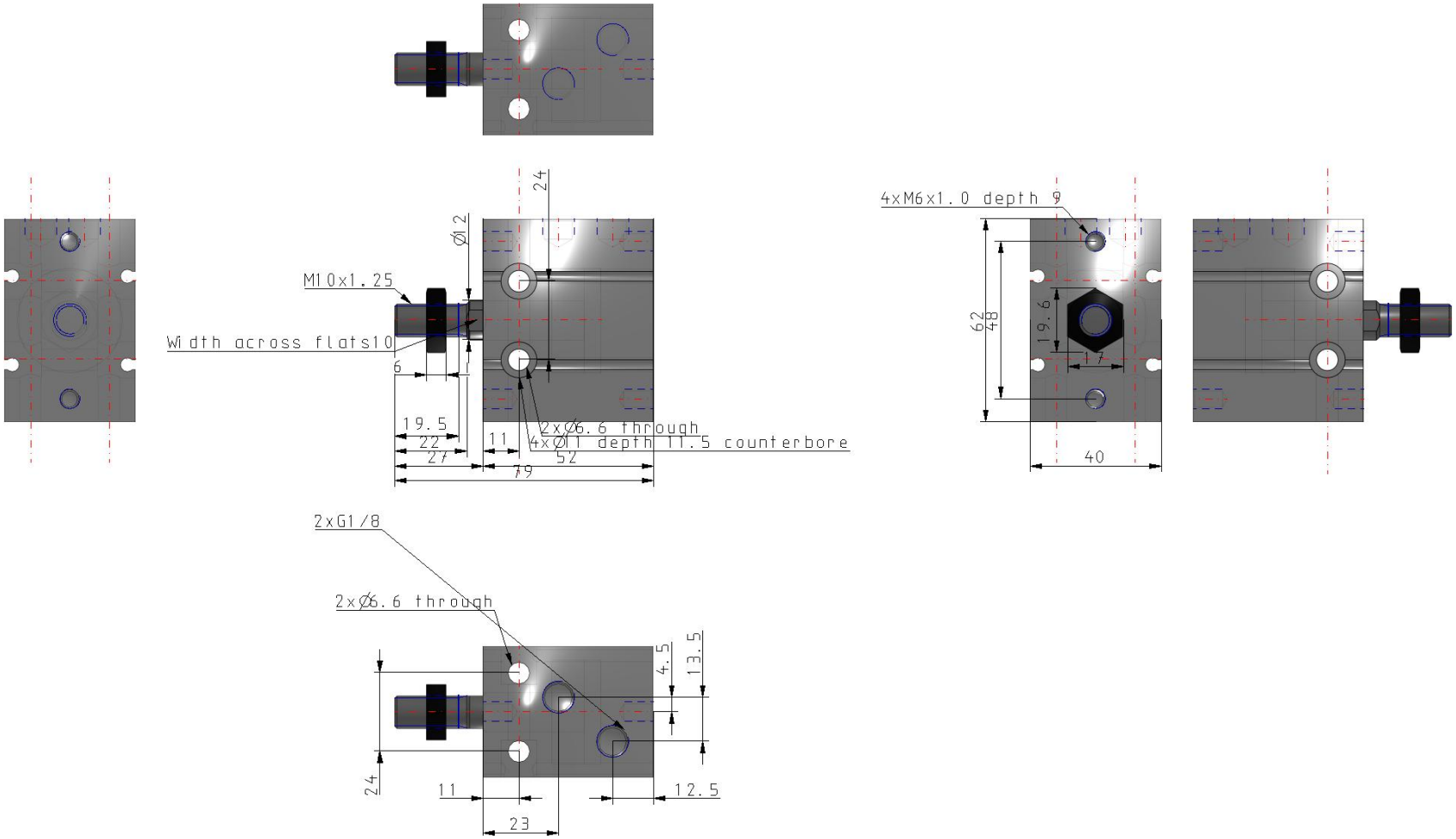

Specifications are subject to change without prior notice and any obligation on the part of the manufacturer.

SMC CORPORATION Zuazobidea 14, 01012, Vitoria-Gasteiz, Álava +34 945184100 +34 945184126 www.smc.eu emcmarketing@smc.smces.es

Constructions

ø16 to ø32

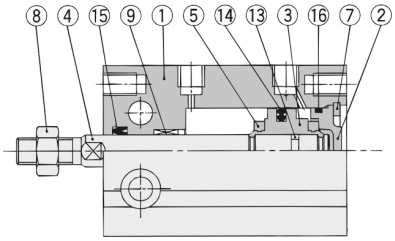

Component Parts

No.	Description	Material	Note
1	Cylinder tube	Aluminum alloy	Hard anodized
2	Head cover	Brass	ø6 to ø10, Electroless nickel plated
		Aluminum alloy	ø16 to ø32, Clear chromated
3	Piston	Brass	ø6 to ø10
		Aluminum alloy	ø16 to ø32, Chromated
4	Piston rod	Stainless steel	
5	Bumper A	Urethane	
6	Bumper B	Urethane	
7	Snap ring	Carbon tool steel	Phosphate coated

Component Parts

No.	Description	Material	Note
8	Rod end nut	Carbon steel	Nickel plated
9	Bushing	Oil-impregnated sintered alloy	
10	Magnet holder	Brass	ø6
11	Magnet	Magnetic material	
12	Auto switch	—	
13	Piston gasket	NBR	
14*	Piston seal		
15*	Rod seal		
16*	Gasket		

Specifications are subject to change without prior notice and any obligation on the part of the manufacturer.

SMC CORPORATION Zuazobidea 14, 01012, Vitoria-Gasteiz, Álava +34 945184100 +34 945184126 www.smc.eu emcmarketing@smc.smces.es

Additional information

Catalogue	CU_B_EU.pdf
Operation manuals	OM_CU_OM0002EN-A.pdf

Specifications are subject to change without prior notice and any obligation on the part of the manufacturer.

SMC CORPORATION Zuazobidea 14, 01012, Vitoria-Gasteiz, Álava +34 945184100 +34 945184126 www.smc.eu emcmarketing@smc.smces.es