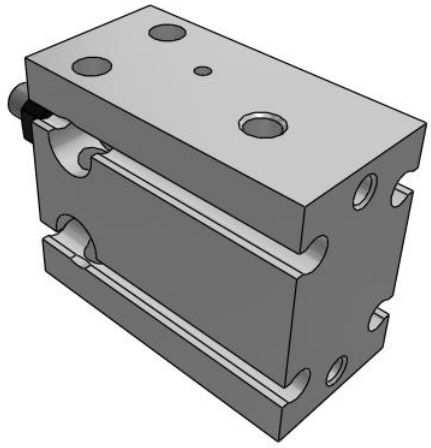

C(D)U, Free Mount Cylinder, Single Acting

CU16-10S

Datasheet

General series information

- Bore sizes from 6mm to 32mm available
- Stroke lengths up to 15mm
- Spring return, spring extend
- Space saving
- Auto-switch capable

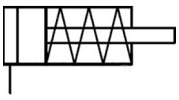

Single-acting cylinder, single piston rod, return stroke by spring

Standard specifications

Bore Size	16 mm
Stroke	10 mm
Action	S (Single Acting Spring Return)
Lead Wire or Prewired Connector	0.5 m (Or None in the Case of No Switch)
Number	2 pcs. (Or None in the Case of No Switch)
Magnet	None
Port Thread	Bores 6~25: M5, Bore 32: Rc 1/8
Auto Switch	No Switch
Maximum operating pressure	0.7 MPa
Minimum operating pressure	0.15 MPa
Proof pressure	1.05 MPa
Theoretical cylinder force, advance stroke (at 0.5 MPa)	86.3 N
Type of cushioning	Rubber Bumper
Piston rod end	Male Thread
Lubrication	Non-lube
Fluid	Air
Ambient and fluid temperature	-10 - 70 °C
Stroke length tolerance	0+1.0 mm

Specifications are subject to change without prior notice and any obligation on the part of the manufacturer.

SMC United Kingdom +34 945184126 sales@smc.uk

Thread Tolerance	JIS Class2
Piston speed	50 - 500 mm/s
Weight	0.056 Kg

Specifications are subject to change without prior notice and any obligation on the part of the manufacturer.

SMC United Kingdom +34 945184126 sales@smc.uk

Dimensions

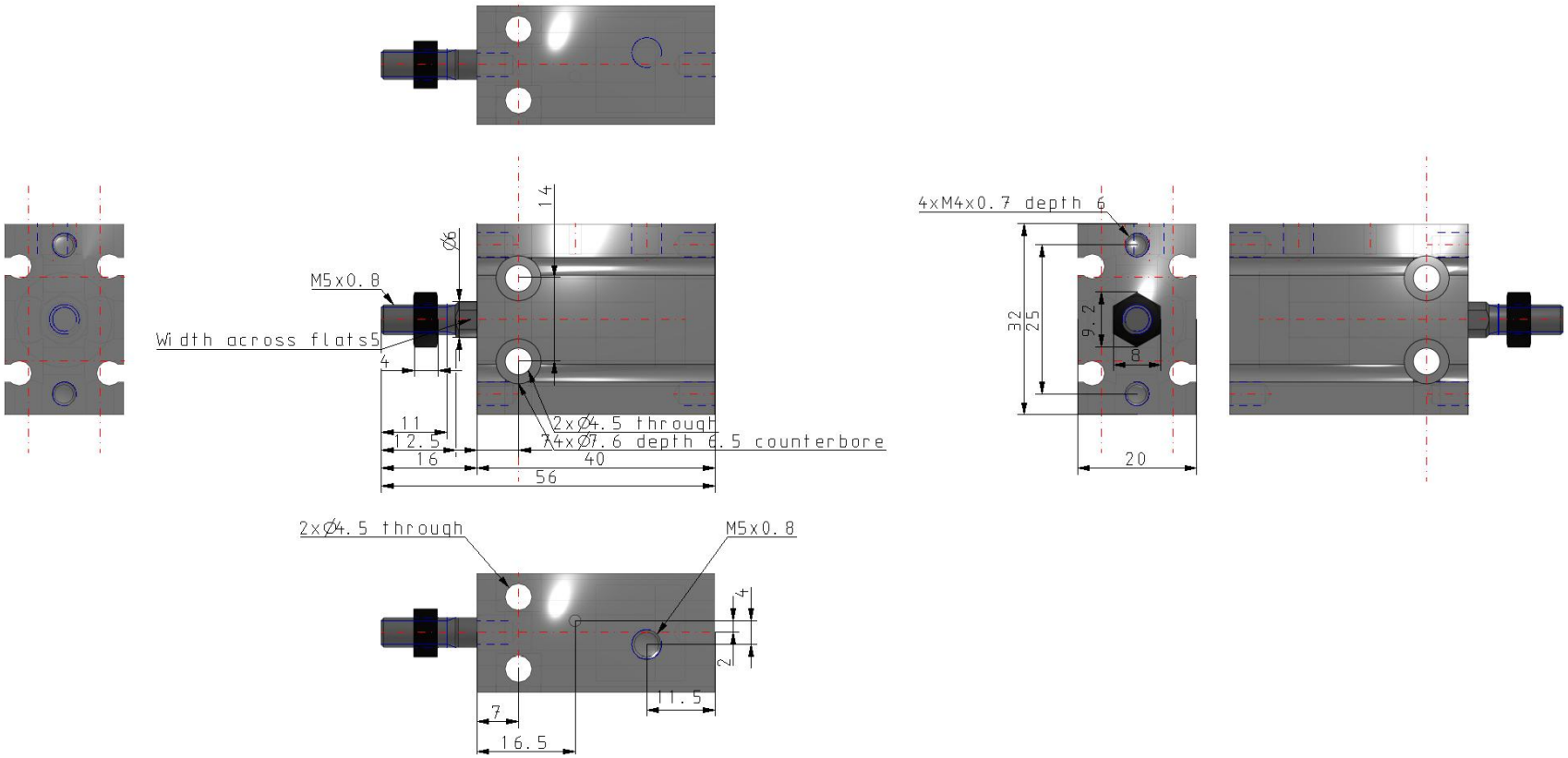

Specifications are subject to change without prior notice and any obligation on the part of the manufacturer.

Constructions

ø16 to ø32 Single acting, Spring return

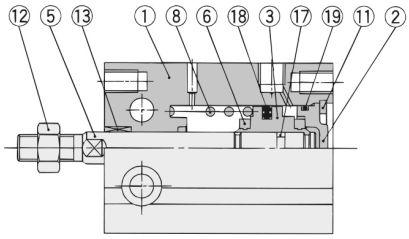

Component Parts

No.	Description	Material	Note
1	Cylinder tube	Aluminum alloy	Hard anodized
2	Head cover	Brass	ø6 to ø10, Electroless nickel plated
		Aluminum alloy	ø16 to ø32, Clear chromated
3	Piston	Brass	ø6 to ø10
		Aluminum alloy	ø16 to ø32, Chromated
4	Piston	Brass	ø10
5	Piston rod	Stainless steel	
6	Bumper A	Urethane	
7	Bumper B	Urethane	
8	Return spring	Piano wire	Zinc chromated

Component Parts

No.	Description	Material	Note
9	Spring seat	Brass	
10	Spring seat	Brass	
11	Snap ring	Carbon tool steel	Phosphate coated
12	Rod end nut	Carbon steel	Nickel plated
13	Bushing	Oil-impregnated sintered alloy	
14	Magnet holder	Brass	ø6
15	Magnet	Magnetic material	
16	Auto switch	—	
17	Piston gasket	NBR	
18*	Piston seal		
19*	Gasket		

Specifications are subject to change without prior notice and any obligation on the part of the manufacturer.

SMC United Kingdom +34 945184126 sales@smc.uk

Additional information

Catalogue	CU_B_EU.pdf
Operation manuals	OM_CU_OM0002EN-A.pdf

Specifications are subject to change without prior notice and any obligation on the part of the manufacturer.

SMC United Kingdom +34 945184126 sales@smc.uk