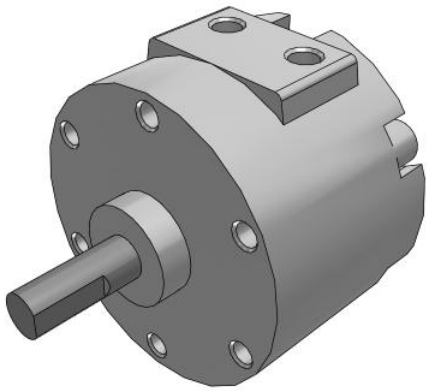

C(D)RB2*W10~40-Z, Rotary Actuator, New Vane Style

CRB2BW20-90SZ

Datasheet

General series information

- Standard type.
- Piping ports are located on the flat surface.
- Many variations of shaft-end shape (6 types).

Standard specifications

Mounting	B (Basic)
Angle Adjusting Unit	None
Lead Wire or Prewired Connector	0.5m (Or None in the Case of No Switch)
Number	2 pcs. (Or None in the Case of No Switch)
Rotation Angle - Vane	90S (Angle: 90 Single Vane)
Magnet	None
Size	20 mm
Port	Side
Auto Switch	No Switch
Standard Shaft Type	W (Double Shaft with Single Flat)
Pressure medium	Air (Non-lube)
Maximum temperature of pressure medium	60 ºC
Minimum temperature of pressure medium	5 ºC
Maximum ambient temperature	60 ºC
Minimum ambient temperature	5 ºC
Number of pneumatic connections	2 pcs.
Geometric form of the piston rod	Single rod
Weight	0.100 Kg

Specifications are subject to change without prior notice and any obligation on the part of the manufacturer.

SMC United Kingdom +34 945184126 sales@smc.uk

Dimensions

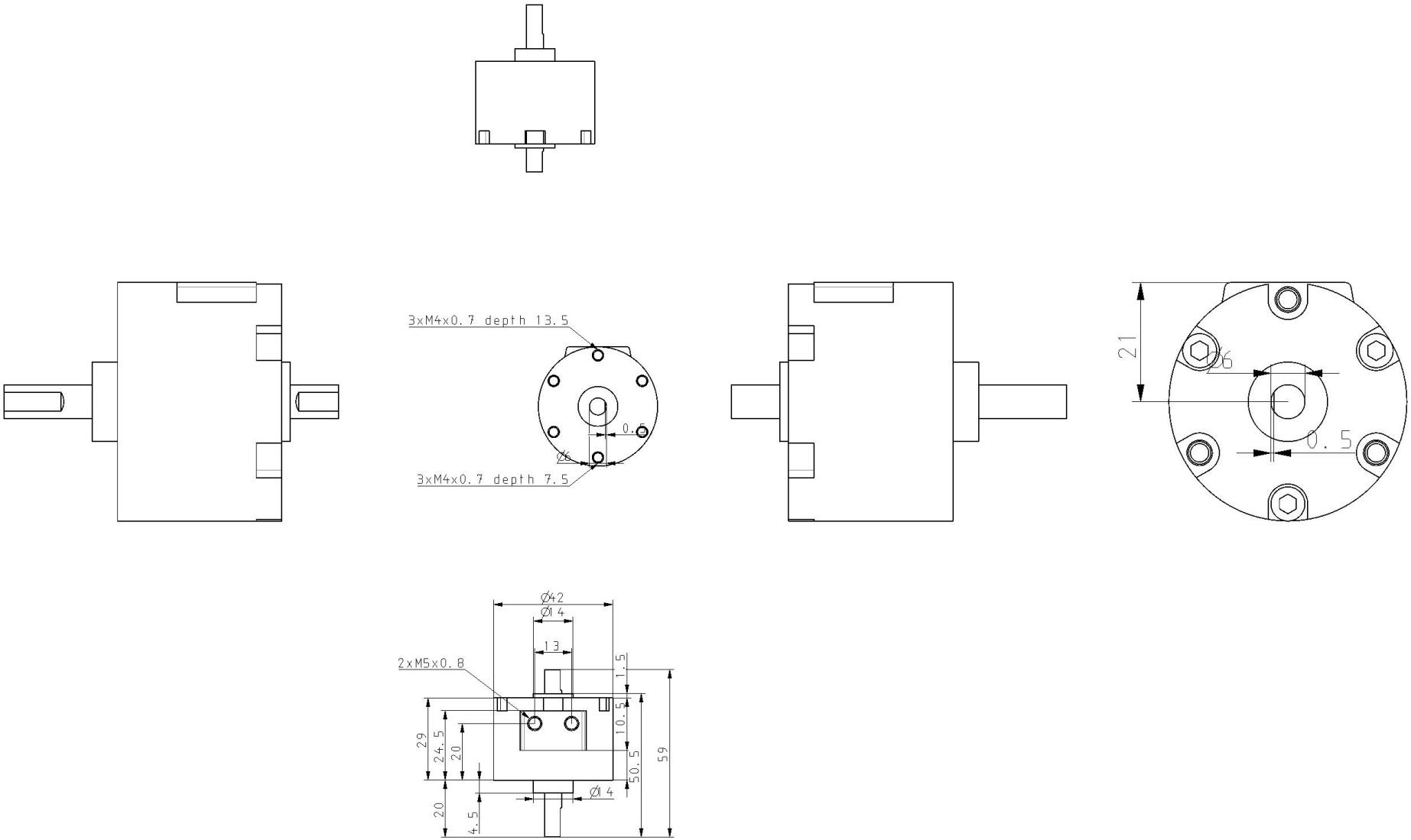

Specifications are subject to change without prior notice and any obligation on the part of the manufacturer.

SMC United Kingdom +34 945184126 sales@smc.uk

Additional information

Catalogue	CRB2-C_EU.pdf
Operation manuals	OM_CRB2_OM00001EN-B.pdf

Specifications are subject to change without prior notice and any obligation on the part of the manufacturer.

SMC United Kingdom +34 945184126 sales@smc.uk