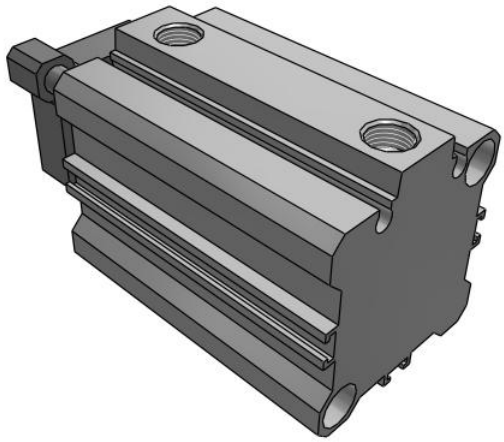

C(D)QM (ø12 to ø32), Compact Cylinder, Guide Rod Type

CQMB32TF-45

Datasheet

General series information

- Guide rod type compact cylinder
- Bore sizes (mm): 12, 16, 20, 25, 32
- Standard strokes (mm): 5 to 100
- 4 times the lateral load resistance of the CQ2K
- Non-rotating accuracy 0.2 or less

Standard specifications

Magnet	None
Mounting	B [Through Hole (Standard)]
Bore Size	Ø32 mm
Port Thread	TF [G]
Stroke	45
Auto Switch	No Switch
Lead Wire or Prewired Connector	0.5 m
Number	2 pcs.
Pressure medium	Compressed air
Number of pneumatic connections	2 pcs.
Weight	0.366 Kg

Specifications are subject to change without prior notice and any obligation on the part of the manufacturer.

SMC CORPORATION Zuazobidea 14, 01012, Vitoria-Gasteiz, Álava +34 945184100 +34 945184126 www.smc.eu support.marketingeurope@smc.com

Dimensions

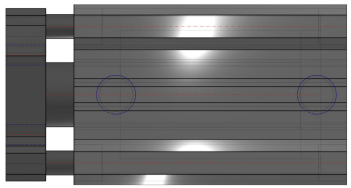

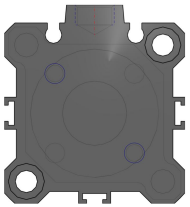

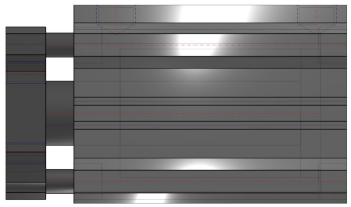

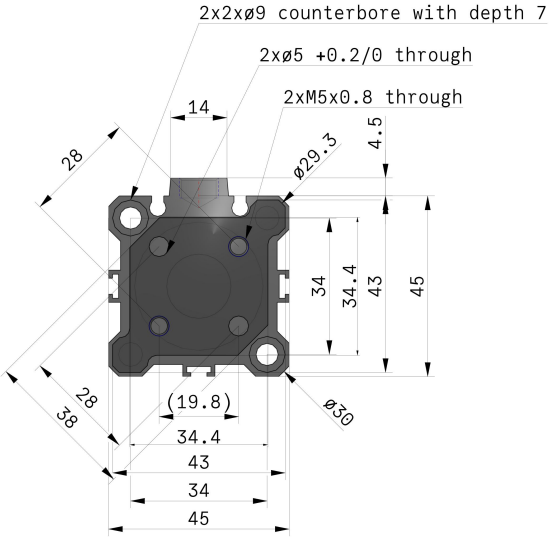

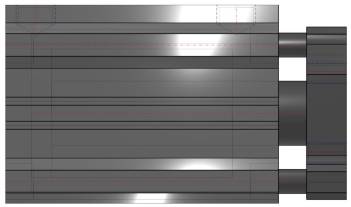

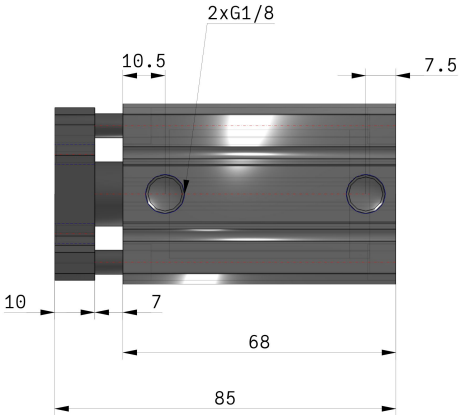

Specifications are subject to change without prior notice and any obligation on the part of the manufacturer.

SMC CORPORATION Zuazobidea 14, 01012, Vitoria-Gasteiz, Álava +34 945184100 +34 945184126 www.smc.eu support.marketingeurope@smc.com

Additional information

Catalogue	CQM_EU.pdf
Operation manuals	cqm_op_manual_cqm_-om0001c.pdf

Specifications are subject to change without prior notice and any obligation on the part of the manufacturer.

SMC CORPORATION Zuazobidea 14, 01012, Vitoria-Gasteiz, Álava +34 945184100 +34 945184126 www.smc.eu support.marketingeurope@smc.com