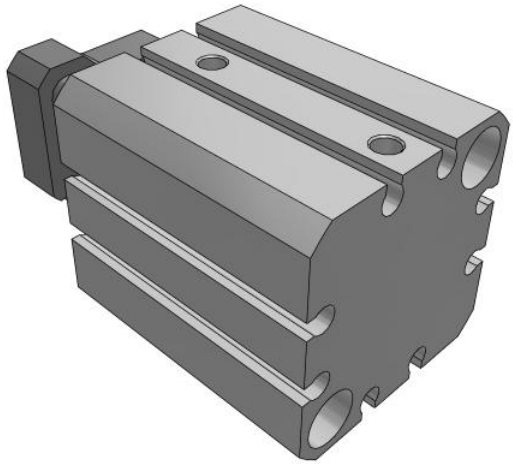

# C(D)QM (ø12 to ø32), Compact Cylinder, Guide Rod Type

## CQMB25-25

Datasheet

## General series information

- Guide rod type compact cylinder
- Bore sizes (mm): 12, 16, 20, 25, 32
- Standard strokes (mm): 5 to 100
- 4 times the lateral load resistance of the CQ2K
- Non-rotating accuracy 0.2 or less

## Standard specifications

| | |
|---|---|
| Mounting | B [Through Hole (Standard)] |
| Bore Size | Ø25 mm |
| Stroke | 25 |
| Lead Wire or Prewired Connector | 0.5 m (Or None in the Case of No Switch) |
| Number | 2 pcs. (Or None in the Case of No Switch) |
| Magnet | None |
| Port Thread | M Thread [ø12-ø25]; Rc [ø32-ø100] |
| Auto Switch | No Switch |
| Pressure medium | Compressed air |
| Number of pneumatic connections | 2 pcs. |
| Weight | 0.198 Kg |

Specifications are subject to change without prior notice and any obligation on the part of the manufacturer.



SMC United Kingdom +34 945184126 sales@smc.uk

# Dimensions

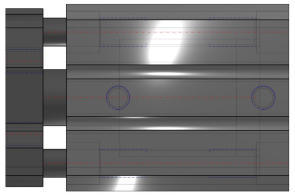

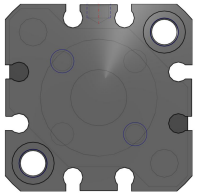

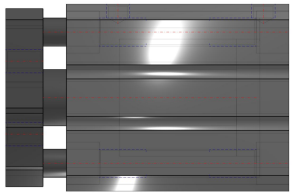

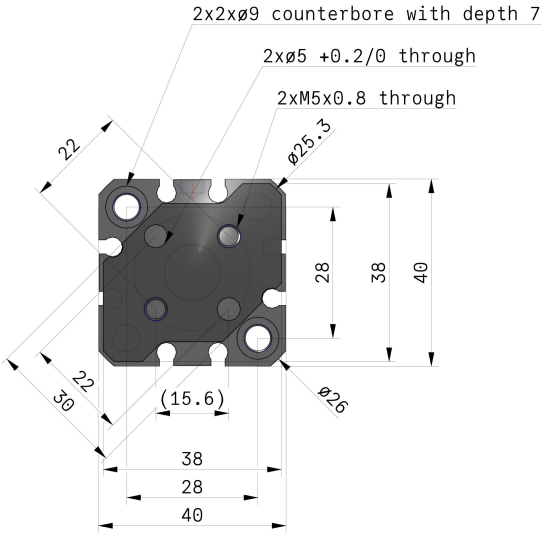


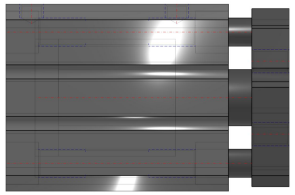

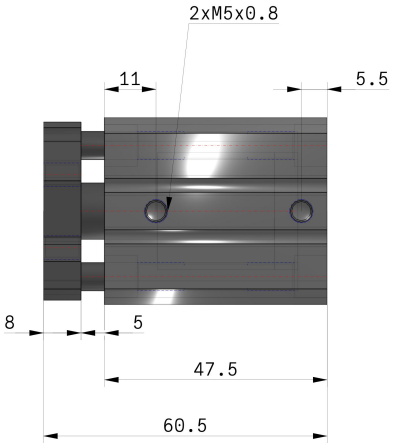


Specifications are subject to change without prior notice and any obligation on the part of the manufacturer.

## Additional information

| | |
|---|---|
| Catalogue | CQM_EU.pdf |
| Operation manuals | cqm_op_manual_cqm_-om0001c.pdf |

Specifications are subject to change without prior notice and any obligation on the part of the manufacturer.



SMC United Kingdom +34 945184126 sales@smc.uk