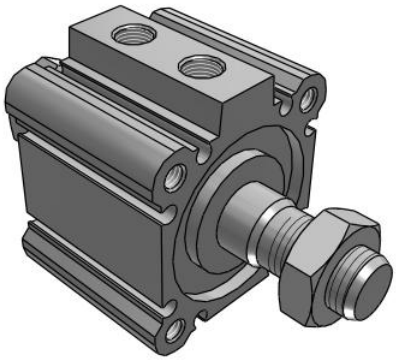

# C(D)Q2KW, Compact Cylinder, Double Acting, Double Rod, Non-rotating w/Auto Switch Mounting Groove

CQ2KWA40TF-5DMZ

Datasheet

## General series information

- Double acting, double rod, non-rotating compact cylinder
- Bore sizes (mm): 12, 16, 20, 25, 32, 40, 50, 63
- Standard stroke range (mm): 5 to 100
- Port threads: M (12 to 25 bore); Rc, NPT or G (32 to 63 bore)
- Can mount small auto switches on 4 surfaces.

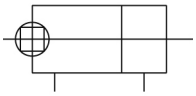

*Double-acting cylinder with double piston rod*

## Standard specifications

| | |
|---|---|
| Magnet | None |
| Mounting | A (Both Ends Tapped; 40 Through 63 Bore) |
| Bore Size | Ø40 mm |
| Port Thread | TF [G] |
| Stroke | 5 mm |
| Body Option | M (Rod End Male Thread) |
| Auto Switch Groove | Z (Auto Switch Mounting Grooves) |
| Auto Switch | No Switch |
| Lead Wire or Pre-wired Connector | 0.5 m (Or None in the Case of No Switch) |
| Number | 2 pcs. |
| Rod End Options | None |
| Pressure medium | Compressed air |
| Maximum temperature of pressure medium | 70 ºC |
| Minimum temperature of pressure medium | -10 °C [without condensation] |
| Maximum operating pressure | 1.0 MPa |
| Minimum operating pressure | 0,05 Mpa |
| Proof pressure | 1.5 MPa |
| Maximum ambient temperature | 70 ºC |

*Specifications are subject to change without prior notice and any obligation on the part of the manufacturer.*



**SMC CORPORATION** Zuazobidea 14, 01012, Vitoria-Gasteiz, Álava +34 945184100 +34 945184126 www.smc.eu support.marketingeurope@smc.com

| | |
|---|---|
| Minimum ambient temperature | -10 °C [without condensation] |
| Number of pneumatic connections | 2 pcs. |
| Pneumatic input connection | G 1/8 |
| Mode of operation of drive | Double acting |
| Theoretical cylinder force, advance stroke (at 0.5 MPa) | 528 N |
| Theoretical cylinder force, return stroke (at 0.5 MPa) | 528 N |
| Maximum piston speed | 500 mm/s |
| Type of Stroke end | Double rod |
| Male thread of rod end | M14 x 1.5 |
| Female thread of rod end | M8 x 1.25 |
| Minimum piston speed | 50 mm/s |

Specifications are subject to change without prior notice and any obligation on the part of the manufacturer.



SMC CORPORATION Zuazobidea 14, 01012, Vitoria-Gasteiz, Álava +34 945184100 +34 945184126 www.smc.eu support.marketingeurope@smc.com

# Dimensions

## ø40～ø63 オートスイッチ付 （オートスイッチなしの場合はA, Bの寸法のみ変わりますので、寸法表をご参照ください。）

両端タップタイプ:CQ2KWA-CDQ2KWA

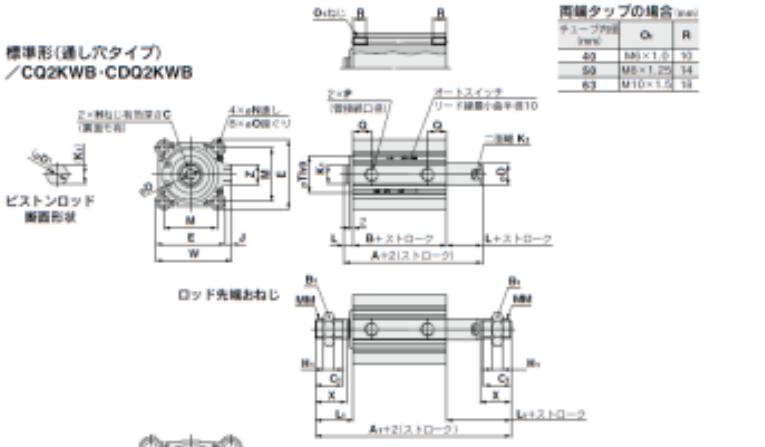


両端タップの場合 (mm)

| チューブ内径 (mm) | $Q_1$ | R |
|---|---|---|
| 40 | M6×1.0 | 10 |
| 50 | M8×1.25 | 14 |
| 63 | M10×1.5 | 18 |

ロッド先端おねじの場合 (mm)

| チューブ内径 (mm) | ストローク範囲 (mm) | $A_1$ オートスイッチ付 | $A_1$ オートスイッチ付 | $B_1$ | $C_1$ | $H_1$ | $L_1$ | MM | X |
|---|---|---|---|---|---|---|---|---|---|
| 40 | 5～50 | 97 | 107 | 22 | 20.5 | 8 | 28.5 | M14×1.5 | 23.5 |
| | 75, 100 | 107 | | | | | | | |
| 50 | 10～50 | 107.5 | 117.5 | 27 | 26 | 11 | 33.5 | M18×1.5 | 28.5 |
| | 75, 100 | 117.5 | | | | | | | |
| 63 | 10～50 | 109 | 119 | 27 | 26 | 11 | 33.5 | M18×1.5 | 28.5 |
| | 75, 100 | 119 | | | | | | | |

ワンタッチ管継手内蔵形／ø40～ø63

ワンタッチ管継手内蔵形 (mm)

| チューブ内径 (mm) | $Z_1$ | $P_1$ | V | $W_1$ |
|---|---|---|---|---|
| 40 | 13 | 6 | 40.5 | 65.5 |
| 50 | 16 | 8 | 50 | 82 |
| 63 | 16 | 8 | 56.5 | 95 |

標準形 オートスイッチの適正取付位置・取付面寸法につきましてはP.954～960をご参照ください。 (mm)

| チューブ内径 (mm) | ストローク範囲 (mm) | A オートスイッチ付 | B オートスイッチ付 | A オートスイッチ付 | B オートスイッチ付 | C | D | E | H | J | $K_1$ | $K_2$ | L | M | N | O | P | Q | Th9 | W | Z |
|---|---|---|---|---|---|---|---|---|---|---|---|---|---|---|---|---|---|---|---|---|---|
| 40 | 5～50 | 54 | 40 | 64 | 50 | 13 | 16 | 52 | M8×1.25 | 5 | 14 | 14 | 7 | 40 | 5.5 | 9深7 | 1/8 | 12.5 | 28.$^{0}_{-0.052}$ | 57 | 15 |
| | 75,100 | 64 | 50 | | | | | | | | | | | | | | | | | | |
| 50 | 10～50 | 66.5 | 40.5 | 86.5 | 53.5 | 15 | 20 | 64 | M10×1.5 | 7 | 18 | 17 | 8 | 50 | 6.6 | 11深8 | 1/4 | 14 | 35.$^{0}_{-0.062}$ | 71 | 19 |
| | 75,100 | 66.5 | 50.5 | | | | | | | | | | | | | | | | | | |
| 63 | 10～50 | 58 | 42 | 68 | 52 | 15 | 20 | 77 | M10×1.5 | 7 | 18 | 17 | 8 | 60 | 9 | 14深10.5 | 1/4 | 15.5 | 35.$^{0}_{-0.062}$ | 84 | 19 |
| | 75,100 | 68 | 52 | | | | | | | | | | | | | | | | | | |

Specifications are subject to change without prior notice and any obligation on the part of the manufacturer.



SMC CORPORATION Zuazobidea 14, 01012, Vitoria-Gasteiz, Álava +34 945184100 +34 945184126 www.smc.eu support.marketingeurope@smc.com

# Constructions

**ø12 to ø25**

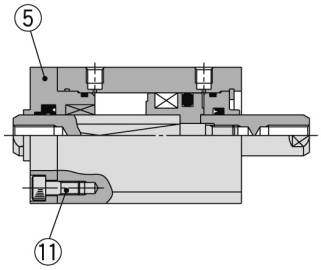


**ø32**

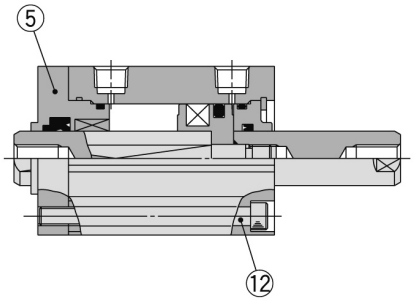


**ø40 to ø63**

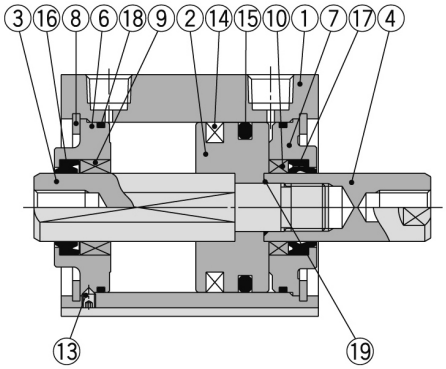


## Component Parts

| No. | Description | Material | Note |
|---|---|---|---|
| 1 | **Cylinder tube** | Aluminum alloy | Hard anodised |
| 2 | **Piston** | Aluminum alloy | Chromated |
| 3 | **Piston rod A** | Stainless steel | ø12 to ø25 |
| | | Carbon steel | ø32 to ø63, Hard chrome plated |
| 4 | **Piston rod B** | Stainless steel | ø12 to ø25 |
| | | Carbon steel | ø32 to ø63, Hard chrome plated |
| 5 | **Rod cover** | Brass | ø12, Electroless nickel plated |
| | | Aluminum alloy | ø16 to ø32, Anodised |
| 6 | **Collar for non-rotating** | Aluminum alloy | ø40 to ø63, Anodised |
| 7 | **Collar** | Aluminum alloy | ø12 to ø40, Anodised |
| | | Aluminum alloy casted | ø50 to ø63, Chromated, Painted |
| 8 | **Retaining ring** | Carbon tool steel | Phosphate coated |
| 9 | **Bushing for non-rotating** | Oil-impregnated sintered alloy | ø16 to ø63 |
| 10 | **Bushing** | Bearing alloy | ø50, ø63 |
| 11 | **Hexagon socket head cap screw** | Alloy steel | ø12 to ø25, Nickel plated |
| 12 | **Hexagon socket head cap screw** | Alloy steel | ø32, Nickel plated |
| 13 | **Hexagon socket head set screw** | Alloy steel | ø40 to ø63, Nickel plated |
| 14 | **Magnet** | — | |
| 15 | **Piston seal** | NBR | |
| 16 | **Rod seal for non-rotating** | NBR | |
| 17 | **Rod seal** | NBR | |
| 18 | **Gasket** | NBR | |
| 19 | **Piston gasket** | NBR | ø32 to ø63 |

## Replacement Parts/Seal Kit

| Bore size (mm) | Kit no. | Contents |
|---|---|---|
| **12** | CQ2KWB12-PS | Kits include items ⑮, ⑯, ⑰, ⑱ from the table. |
| **16** | CQ2KWB16-PS | |
| **20** | CQ2KWB20-PS | |
| **25** | CQ2KWB25-PS | |
| **32** | CQ2KWB32-PS | |
| **40** | CQ2KWB40-PS | |
| **50** | CQ2KWB50-PS | |
| **63** | CQ2KWB63-PS | |

* Seal kit includes ⑮, ⑯, ⑰, ⑱. Order the seal kit based on each bore size.
* Since the seal kit does not include a grease pack, order it separately.
**Grease pack part no.: GR-S-010** (10 g)

*Specifications are subject to change without prior notice and any obligation on the part of the manufacturer.*



**SMC CORPORATION** Zuazobidea 14, 01012, Vitoria-Gasteiz, Álava +34 945184100 +34 945184126 www.smc.eu support.marketingeurope@smc.com

## Additional information

| | |
|---|---|
| Catalogue | CQ2-Z-D_EU.pdf |
| Operation manuals | OM_CQ2x_OM0002MEN.pdf |

Specifications are subject to change without prior notice and any obligation on the part of the manufacturer.



SMC CORPORATION Zuazobidea 14, 01012, Vitoria-Gasteiz, Álava +34 945184100 +34 945184126 www.smc.eu support.marketingeurope@smc.com