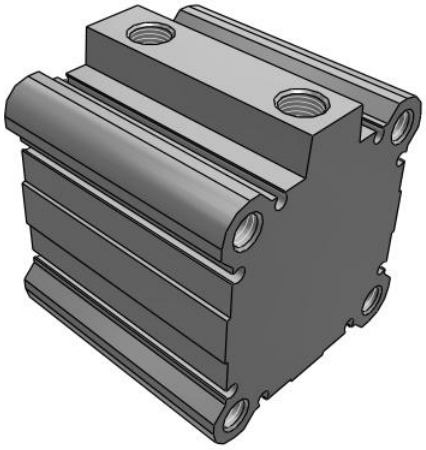

C(D)Q2K, Compact Cylinder, Double Acting, Single Rod, Non-rotating w/Auto Switch Mounting Groove

CQ2KA63TF-40DMZ

Datasheet

General series information

- Double acting, single rod, non-rotating compact cylinder
- Bore sizes (mm): 12, 16, 20, 25, 32, 40, 50, 63
- Standard stroke range (mm): 5 to 100
- Port threads: M (12 to 25 bore); Rc, NPT or G (32 to 63 bore)
- Can mount small auto switches on 4 surfaces.

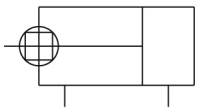

Double-acting, single-rod cylinder

Standard specifications

Magnet	None
Mounting	A (Both Ends Tapped; 40 Through 63 Bore)
Bore Size	Ø63 mm
Port Thread	TF (G)
Stroke	40
Body Option	M (Rod End Male Thread)
Auto Switch Groove	Z [Auto Switch Mounting Grooves]
Auto Switch	No Switch
Lead Wire or Pre-wired Connector	0.5 m (Or None in the Case of No Switch)
Number	2 pcs.
Rod End Options	None
Pressure medium	Compressed air
Maximum temperature of pressure medium	70 ºC
Minimum temperature of pressure medium	-10 °C [without condensation]
Maximum operating pressure	1.0 MPa
Minimum operating pressure	0,05 MPa
Proof pressure	1.5 MPa
Maximum ambient temperature	70 ºC

Specifications are subject to change without prior notice and any obligation on the part of the manufacturer.

SMC CORPORATION Zuazobidea 14, 01012, Vitoria-Gasteiz, Álava +34 945184100 +34 945184126 www.smc.eu support.marketingeurope@smc.com

Minimum ambient temperature	-10 °C [without condensation]
Number of pneumatic connections	2 pcs.
Pneumatic input connection	G 1/4
Mode of operation of drive	Double acting
Theoretical cylinder force, advance stroke (at 0.5 MPa)	1560 N
Theoretical cylinder force, return stroke (at 0.5 MPa)	1400 N
Maximum piston speed	500 mm/s
Geometric form of the piston rod	Single rod
Male thread of rod end	M18 x 1.5
Female thread of rod end	M10 x 1.5
Minimum piston speed	50 mm/s

Specifications are subject to change without prior notice and any obligation on the part of the manufacturer.

SMC CORPORATION Zuazobidea 14, 01012, Vitoria-Gasteiz, Álava +34 945184100 +34 945184126 www.smc.eu support.marketingeurope@smc.com

Dimensions

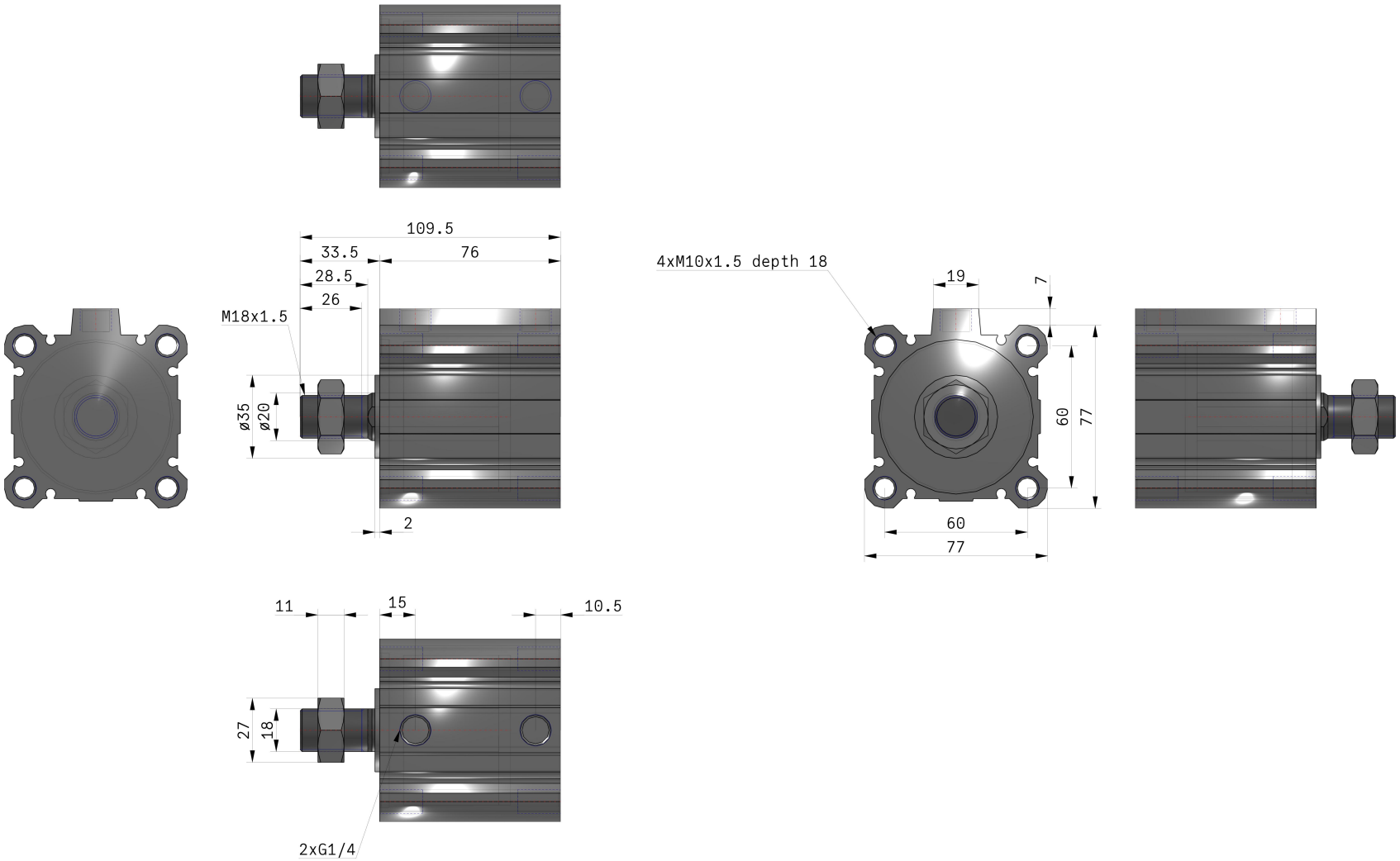

Specifications are subject to change without prior notice and any obligation on the part of the manufacturer.

SMC CORPORATION Zuazobidea 14, 01012, Vitoria-Gasteiz, Álava +34 945184100 +34 945184126 www.smc.eu support.marketingeurope@smc.com

Constructions

ø12 to ø25

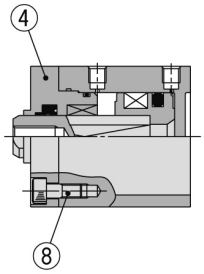

ø32

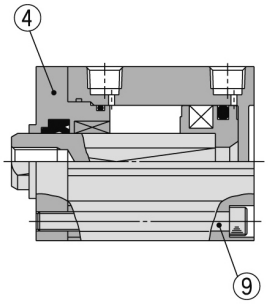

ø40 to ø63

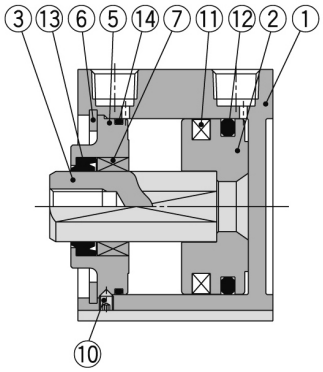

Component Parts

No.	Description	Material	Note
1	**Cylinder tube**	Aluminum alloy	Hard anodised
2	**Piston**	Aluminum alloy	Chromated
3	**Piston rod**	Stainless steel	ø12 to ø25
		Carbon steel	ø32 to ø63, Hard chrome plated
4	**Rod cover**	Brass	ø12, Electroless nickel plated
		Aluminum alloy	ø16 to ø32, Anodised
5	**Collar**	Aluminum alloy	ø40 to ø63, Anodised
6	**Retaining ring**	Carbon tool steel	Phosphate coated
7	**Bushing**	Oil-impregnated sintered alloy	ø16 to ø63
8	Hexagon socket head cap screw	Alloy steel	ø12 to ø25, Nickel plated
9	Hexagon socket head cap screw	Alloy steel	ø32, Nickel plated
10	Hexagon socket head set screw	Alloy steel	ø40 to ø63, Nickel plated
11	**Magnet**	—	
12	**Piston seal**	NBR	
13	**Rod seal**	NBR	
14	**Tube gasket**	NBR	

Replacement Parts/Seal Kit (Pneumatic type (Non-lube))

Bore size (mm)	Kit no.	Contents
12	CQ2KB12-PS	Kits include items ⑫, ⑬, ⑭ from the table.
16	CQ2KB16-PS	
20	CQ2KB20-PS	
25	CQ2KB25-PS	
32	CQ2KB32-PS	
40	CQ2KB40-PS	
50	CQ2KB50-PS	
63	CQ2KB63-PS	

∗ Seal kit includes ⑫, ⑬, ⑭. Order the seal kit, based on each bore size.
∗ Since the seal kit does not include a grease pack, order it separately.
Grease pack part no.: GR-S-010 (10 g)

Specifications are subject to change without prior notice and any obligation on the part of the manufacturer.

SMC CORPORATION Zuazobidea 14, 01012, Vitoria-Gasteiz, Álava +34 945184100 +34 945184126 www.smc.eu support.marketingeurope@smc.com

Additional information

Catalogue	CQ2-Z-D_EU.pdf
Operation manuals	OM_CQ2x_OM0002MEN.pdf

Specifications are subject to change without prior notice and any obligation on the part of the manufacturer.

SMC CORPORATION Zuazobidea 14, 01012, Vitoria-Gasteiz, Álava +34 945184100 +34 945184126 www.smc.eu support.marketingeurope@smc.com