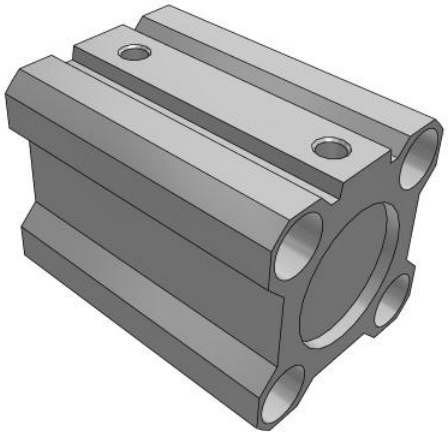

C(D)Q2, Compact Cylinder, Double Acting, Single Rod w/Auto Switch Mounting Groove

CQ2B20-30DM

Datasheet

General series information

- Double acting, single rod, compact cylinder
- Bore sizes (mm): 12, 16, 20, 25, 32, 40, 50, 63, 80, 100
- Standard stroke range (mm): 5 to 100
- Port threads: M (12 to 25 bore); Rc, NPT or G (32 to 100 bore)
- Can mount small auto switches on 4 surfaces.

Standard specifications

Low Speed	None
Stroke	30
Magnet	None
Rod End Options	None
Made of Stainless Steel	None
Auto Switch	No Switch
Mounting	B (Through Hole [Standard])
Bore Size	Ø20 mm
Type	Standard
Lead Wire or Prewired Connector	0.5 m or None in the Case of No Switch
Fluororubber Seal	None
Number	2 pcs.
Auto Switch Groove	None, also for 12-25 Bore w/o Magnet
Mounting Bolt	None
Rod End Bracket	None
Temperature Resistance	None
Port Thread Type	Rc (or M Thread for 16 & 20 Bore or 32 stroke 5mm)
Body Option	M [Rod End Male Thread]

Specifications are subject to change without prior notice and any obligation on the part of the manufacturer.

SMC United Kingdom +34 945184126 sales@smc.uk

Pressure medium	Compressed air
Maximum temperature of pressure medium	70 ºC
Minimum temperature of pressure medium	-10 °C
Maximum operating pressure	1.0 MPa
Minimum operating pressure	0,05 Mpa
Proof pressure	1.5 MPa
Maximum ambient temperature	70 ºC
Minimum ambient temperature	-10 °C
Number of pneumatic connections	2 pcs.
Pneumatic input connection	M5
Mode of operation of drive	Double acting
Theoretical cylinder force, advance stroke (at 0.5 MPa)	157 N
Theoretical cylinder force, return stroke (at 0.5 MPa)	118 N
Maximum piston speed	500 mm/s
Geometric form of the piston rod	Single rod
Male thread of rod end	M8 x 1.25
Female thread of rod end	M5 x 0.8
Minimum piston speed	50 mm/s
Weight	0.200 Kg

Specifications are subject to change without prior notice and any obligation on the part of the manufacturer.

SMC United Kingdom +34 945184126 sales@smc.uk

Dimensions

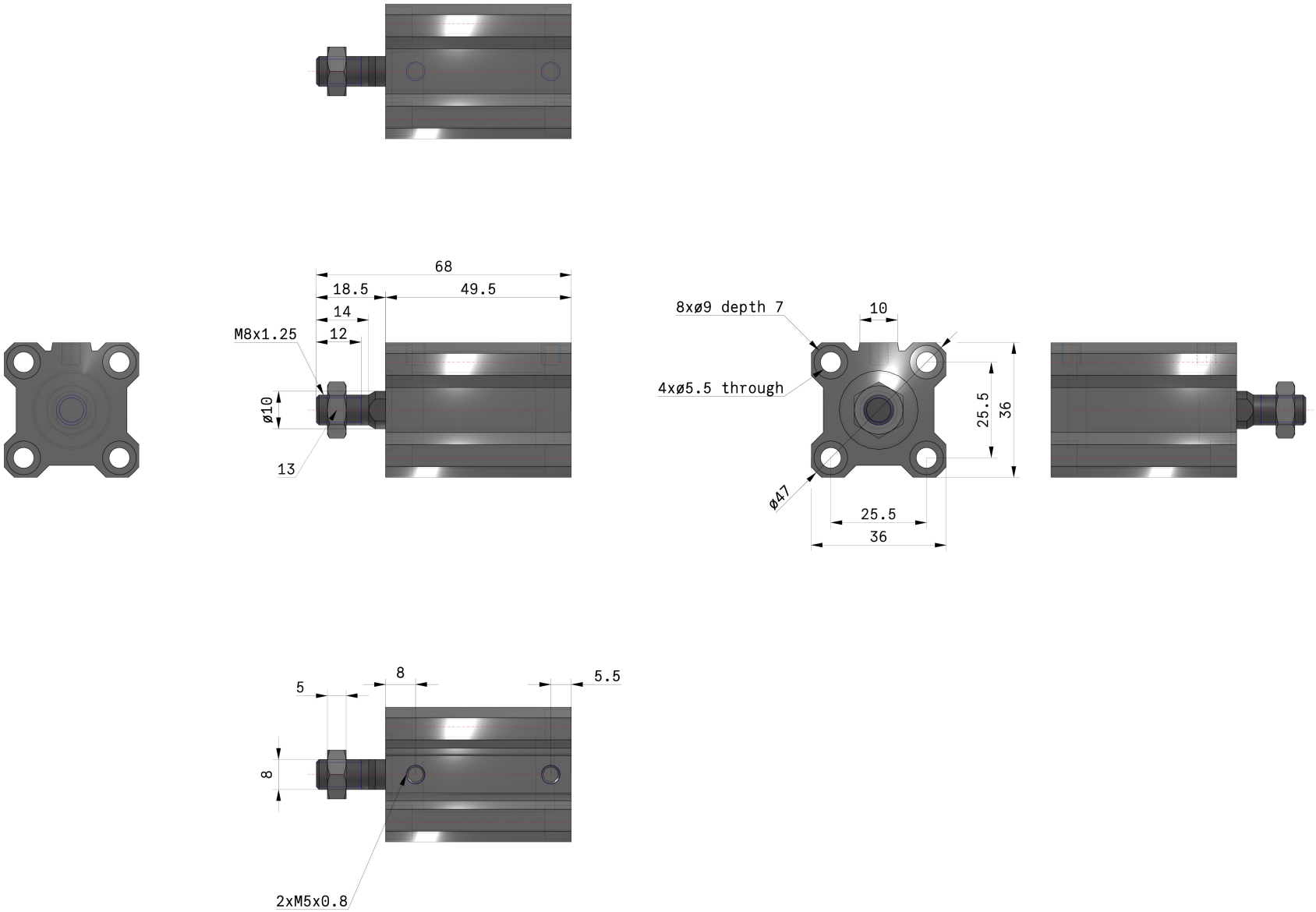

Specifications are subject to change without prior notice and any obligation on the part of the manufacturer.

Constructions

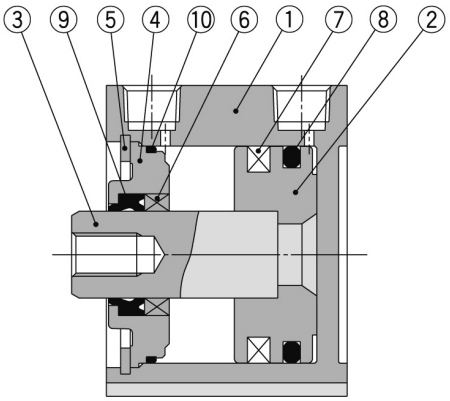

Component Parts

No.	Description	Material	Note
1	**Cylinder tube**	Aluminum alloy	Hard anodised
2	**Piston**	Aluminum alloy	Chromated
3	**Piston rod**	Stainless steel	ø12 to ø25
		Carbon steel	ø32 to ø100, Hard chrome plated
4	**Collar**	Aluminum alloy	ø12 to ø40, Anodised
		Aluminum alloy casted	ø50 to ø100, Chromated, Painted
5	**Retaining ring**	Carbon tool steel	Phosphate coated
6	**Bushing**	Bearing alloy	For ø50 or more only
7	**Magnet**	—	
8	**Piston seal**	NBR	
9	**Rod seal**	NBR	
10	**Gasket**	NBR	

Replacement Parts/Seal Kit (Pneumatic type)

Bore size (mm)	Kit no.	Contents
12	CQ2B12-PS	Kits include items ⑧, ⑨, ⑩ from the table.
16	CQ2B16-PS	
20	CQ2B20-PS	
25	CQ2B25-PS	
32	CQ2B32-PS	
40	CQ2B40-PS	
50	CQ2B50-PS	
63	CQ2B63-PS	
80	CQ2B80-PS	
100	CQ2B100-PS	

∗ Seal kit includes ⑧, ⑨, ⑩. Order the seal kit, based on each bore size.
∗ Since the seal kit does not include a grease pack, order it separately.
Grease pack part no.: GR-S-010 (10 g)

Replacement Parts/Seal Kit (Air-hydro type)

Bore size (mm)	Kit no.	Contents
20	CQ2BH20-PS	Kits include items ⑧, ⑨, ⑩ from the table.
25	CQ2BH25-PS	
32	CQ2BH32-PS	
40	CQ2BH40-PS	
50	CQ2BH50-PS	
63	CQ2BH63-PS	
80	CQ2BH80-PS	
100	CQ2BH100-PS	

∗ Seal kit includes ⑧, ⑨, ⑩. Order the seal kit, based on each bore size.
∗ Since the seal kit does not include a grease pack, order it separately.
Grease pack part no.: GR-S-010 (10 g)

Specifications are subject to change without prior notice and any obligation on the part of the manufacturer.

SMC United Kingdom +34 945184126 sales@smc.uk

Additional information

Catalogue	CQ2-Z-C_EU.pdf
Operation manuals	OM_CQ2x_OM0002MEN.pdf

Specifications are subject to change without prior notice and any obligation on the part of the manufacturer.

SMC United Kingdom +34 945184126 sales@smc.uk