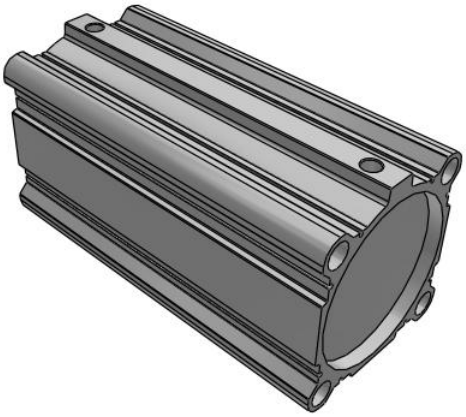

C(D)Q2, Compact Cylinder, Double Acting, Single Rod, Large Bore w/Auto Switch Mounting Groove

CQ2B140TF-250DCMZ

Datasheet

General series information

- Compact, double acting, single rod, large bore
- Bore sizes (mm): 125, 140, 160, 180, 200
- Standard stroke range (mm): 10 to 300
- Port threads: Rc, NPT, G
- Can mount small auto switches on 4 surfaces.

Double-acting, single-rod cylinder

Standard specifications

Magnet	None
Bore Size	Ø140 mm
Port Thread	TF (G)
Stroke	250
Body Option	M (Rod End Male Thread)
Auto Switch	No Switch
Lead Wire or Pre-wired Connector	0.5 m (Or None in the Case of No Switch)
Number	2 pcs.
Rod End Options	None
Fluororubber Seal	None
Pressure medium	Compressed air
Maximum temperature of pressure medium	70 ºC
Minimum temperature of pressure medium	-10 °C
Maximum operating pressure	1.0 MPa
Minimum operating pressure	0.05 MPa
Proof pressure	1.5 MPa
Maximum ambient temperature	70 ºC
Minimum ambient temperature	-10 °C

Specifications are subject to change without prior notice and any obligation on the part of the manufacturer.

SMC CORPORATION Zuazobidea 14, 01012, Vitoria-Gasteiz, Álava +34 945184100 +34 945184126 www.smc.eu support.marketingeurope@smc.com

Number of pneumatic connections	2 pcs.
Pneumatic input connection	G 3/8
Mode of operation of drive	Double acting
Theoretical cylinder force, advance stroke (at 0.5 MPa)	7,188 N
Theoretical cylinder force, return stroke (at 0.5 MPa)	7,697 N
Maximum piston speed	500 mm/s
Piston rod end	Male thread
Geometric form of the piston rod	Single rod
Male thread of rod end	M30 x 1.5
Female thread of rod end	M22 x 2.5
Minimum piston speed	50 mm/s
Weight	13.640 Kg

Specifications are subject to change without prior notice and any obligation on the part of the manufacturer.

SMC CORPORATION Zuazobidea 14, 01012, Vitoria-Gasteiz, Álava +34 945184100 +34 945184126 www.smc.eu support.marketingeurope@smc.com

Dimensions

CQ2 Series

チューブ内径

ø125～ø160

オートスイッチなし、付とも外形寸法は同じです。

標準形(通し穴タイプ)／C□Q2B

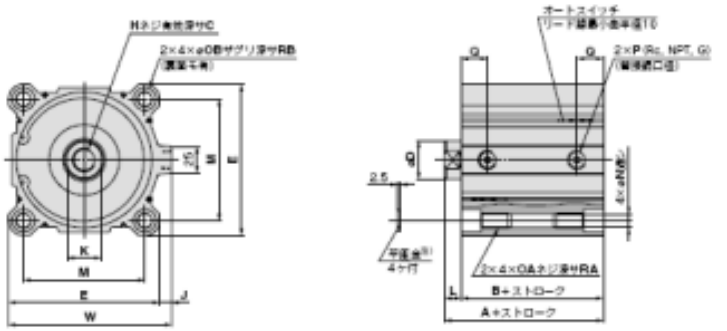

ロッド先端おねじ

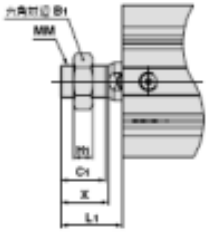

ロッド先端おねじの場合 (mm)

チューブ内径 (mm)	B1	C1	H1	L1	MM	X
125	46	42	18	58	M30×1.5	45
140	46	42	18	58	M30×1.5	45
160	55	47	21	64	M36×1.5	50

(mm)

チューブ内径	標準ストローク範囲	A	B	C	D	E	H	J	K	L	M	N	OA	OB	P	Q	RA	RB	W
125	10, 20, 30, 40, 50	99	83	30	36	142	M22×2.5	11	32	16	14	12.5	M14×2	21.2	3/8	24.5	26	18.4	153
140	75, 100, 125, 150	99	83	30	36	158	M22×2.5	10	32	16	28	12.5	M14×2	21.2	3/8	24.5	26	18.4	168
160	175, 200, 250, 300	108	91	33	40	178	M24×3	10	36	17	44	14.5	M16×2	24.2	3/8	27.5	28	21.2	188

(注) 通し穴でシリンダを取付ける際は、付属の平座金を必ずご使用ください。

Specifications are subject to change without prior notice and any obligation on the part of the manufacturer.

SMC CORPORATION Zuazobidea 14, 01012, Vitoria-Gasteiz, Álava +34 945184100 +34 945184126 www.smc.eu support.marketingeurope@smc.com

Constructions

Standard

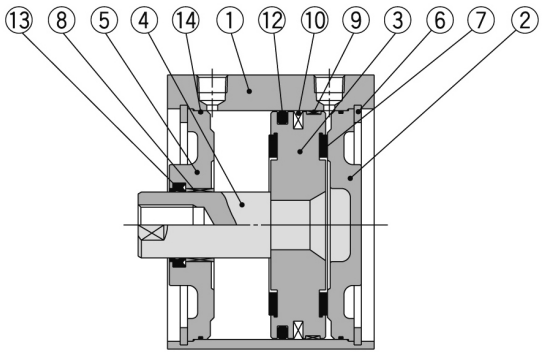

Rod end male thread

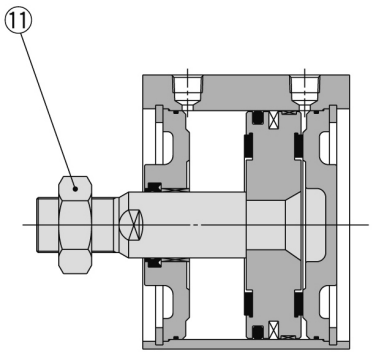

Component Parts

No.	Description	Material	Note
1	**Cylinder tube**	Aluminum alloy	Hard anodised
2	**Head cover**	Carbon steel	Nickel plated
3	**Piston**	Aluminum alloy	Chromated
4	**Piston rod**	Carbon steel	Hard chrome plated
5	**Rod cover**	Carbon steel	Nickel plated
6	**Retaining ring**	Carbon tool steel	Phosphate coated
7	**Bumper**	Urethane	
8	**Bushing**	Bearing alloy	
9	**Wear ring**	Resin	
10	**Magnet**	—	For CDQ2B□ only
11	**Rod end nut**	Carbon steel	Nickel plated
12	**Piston seal**	NBR	
13	**Rod seal**	NBR	
14	**Tube gasket**	NBR	

Replacement Parts/Seal Kit

Bore size (mm)	Kit no.	Contents
125	CQ2B125-PS	Kits include items ⑫, ⑬, ⑭ from the table.
140	CQ2B140-PS	
160	CQ2B160-PS	
180	CQ2B180-PS	
200	CQ2B200-PS	

∗ Seal kit includes ⑫, ⑬, ⑭. Order the seal kit, based on each bore size.
∗ Since the seal kit does not include a grease pack, order it separately.
Grease pack part no.: GR-S-010 (10 g)

Specifications are subject to change without prior notice and any obligation on the part of the manufacturer.

SMC CORPORATION Zuazobidea 14, 01012, Vitoria-Gasteiz, Álava +34 945184100 +34 945184126 www.smc.eu support.marketingeurope@smc.com

Additional information

Catalogue	CQ2-Z-D_EU.pdf
Operation manuals	OM_CQ2x_OM0002MEN.pdf

Specifications are subject to change without prior notice and any obligation on the part of the manufacturer.

SMC CORPORATION Zuazobidea 14, 01012, Vitoria-Gasteiz, Álava +34 945184100 +34 945184126 www.smc.eu support.marketingeurope@smc.com