C(D)Q2, Compact Cylinder, Double Acting Single Rod, Long Stroke w/Auto Switch Mounting Groove

CQ2A80TF-300DCZ

Datasheet

General series information

- Compact Cylinder: Long Stroke Double Acting, Single Rod
- Bore sizes (mm): 32, 40, 50, 63, 80, 100
- Standard stroke range (mm): 125 to 300
- Port threads: Rc, NPT or G
- Can mount small auto switches on 4 surfaces.

Double-acting, single-rod cylinder

Standard specifications

Magnet	None
Mounting	A (Both Ends Tapped)
Type	Standard
Bore Size	Ø80 mm
Port Thread	TF [G]
Stroke	300
Cushion	C (Rubber Bumper)
Body Option	Standard (Rod End Female Thread)
Auto Switch	No Switch
Lead Wire or Pre-wired Connector	0.5 m (Or None in the Case of No Switch)
Number	2 pcs.
Rod End Options	None
Made of Stainless Steel	None
Fluororubber Seal	None
Pressure medium	Compressed air
Maximum temperature of pressure medium	70 ºC
Minimum temperature of pressure medium	-10 °C
Maximum operating pressure	1.0 MPa

Specifications are subject to change without prior notice and any obligation on the part of the manufacturer.

SMC CORPORATION Zuazobidea 14, 01012, Vitoria-Gasteiz, Álava +34 945184100 +34 945184126 www.smc.eu support.marketingeurope@smc.com

Minimum operating pressure	0.05 MPa
Proof pressure	1.5 MPa
Maximum ambient temperature	70 ºC
Minimum ambient temperature	-10 °C
Number of pneumatic connections	2 pcs.
Pneumatic input connection	G 3/8
Mode of operation of drive	Double acting
Maximum piston speed	500 mm/s
Type of cushioning	Elastically
Piston rod end	Female-Thread
Geometric form of the piston rod	Single rod
Male thread of rod end	M22 x 1.5
Female thread of rod end	M16 x 2.0
Minimum piston speed	50 mm/s
Weight	4.365 Kg

Specifications are subject to change without prior notice and any obligation on the part of the manufacturer.

SMC CORPORATION Zuazobidea 14, 01012, Vitoria-Gasteiz, Álava +34 945184100 +34 945184126 www.smc.eu support.marketingeurope@smc.com

Dimensions

ø63～ø100

C□Q2Aシリーズ

オートスイッチなし、付とも外形寸法は同じです。

両端タップタイプ

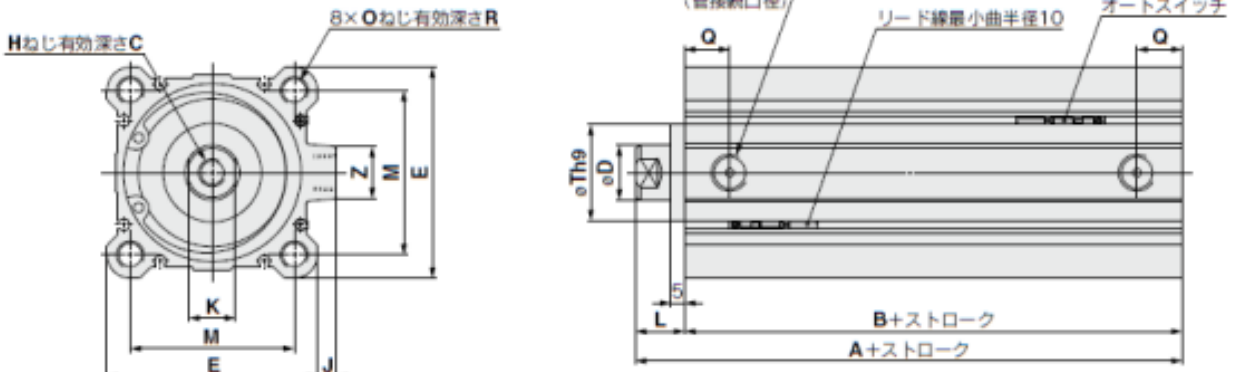

ロッド先端おねじ

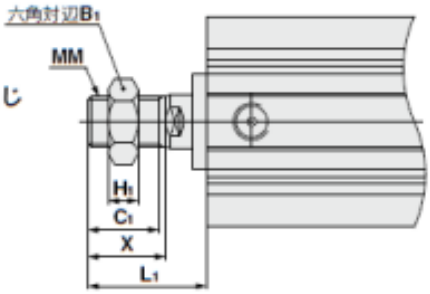

ロッド先端おねじの場合 (mm)

チューブ内径 (mm)	B_1	C_1	H_1	L_1	MM	X
63	27	26	11	43.5	M18×1.5	28.5
80	32	32.5	13	53.5	M22×1.5	35.5
100	41	32.5	16	53.5	M26×1.5	35.5

ワンタッチ管継手内蔵形の寸法はCQ2シリーズ／複動片ロッドと同等です。

Specifications are subject to change without prior notice and any obligation on the part of the manufacturer.

SMC CORPORATION Zuazobidea 14, 01012, Vitoria-Gasteiz, Álava +34 945184100 +34 945184126 www.smc.eu support.marketingeurope@smc.com

Constructions

Standard

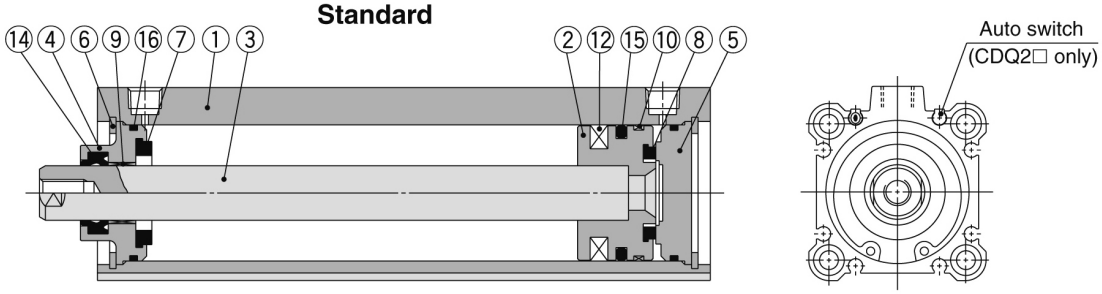

Rod end male thread

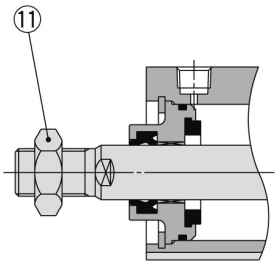

Built-in one-touch fittings

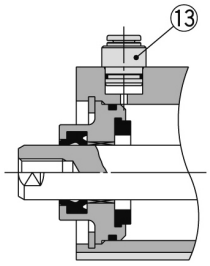

Component Parts

No.	Description	Material	Note
1	**Cylinder tube**	Aluminum alloy	Hard anodised
2	**Piston**	Aluminum alloy	Chromated
3	**Piston rod**	Carbon steel	Hard chrome plated
4	**Collar**	Aluminum alloy	Anodised
5	**Bottom plate**	Aluminum alloy	Anodised
6	**Retaining ring**	Carbon tool steel	Phosphate coated
7	**Bumper A**	Urethane	
8	**Bumper B**	Urethane	
9	**Bushing**	Bearing alloy	
10	**Wear ring**	Resin	
11	**Rod end nut**	Carbon steel	Nickel plated
12	**Magnet**	—	For CDQ2A□ only
13	**One-touch fitting**	—	ø32 to ø63
14 *	**Rod seal**	NBR	
15 *	**Piston seal**	NBR	
16 *	**Tube gasket**	NBR	

Replacement Parts/Seal Kit

Bore size (mm)	Kit no.	Contents
32	CQ2A32-L-PS	Kits include items ⑭, ⑮, ⑯ from the table.
40	CQ2A40-L-PS	
50	CQ2A50-L-PS	
63	CQ2A63-L-PS	
80	CQ2A80-L-PS	
100	CQ2A100-L-PS	

* Seal kit includes ⑭, ⑮, ⑯. Order the seal kit, based on each bore size.
* Since the seal kit does not include a grease pack, order it separately.
Grease pack part no.: GR-S-010 (10 g)

Specifications are subject to change without prior notice and any obligation on the part of the manufacturer.

SMC CORPORATION Zuazobidea 14, 01012, Vitoria-Gasteiz, Álava +34 945184100 +34 945184126 www.smc.eu support.marketingeurope@smc.com

Additional information

Catalogue	CQ2-Z-D_EU.pdf
Operation manuals	OM_CQ2x_OM0002MEN.pdf

Specifications are subject to change without prior notice and any obligation on the part of the manufacturer.

SMC CORPORATION Zuazobidea 14, 01012, Vitoria-Gasteiz, Álava +34 945184100 +34 945184126 www.smc.eu support.marketingeurope@smc.com