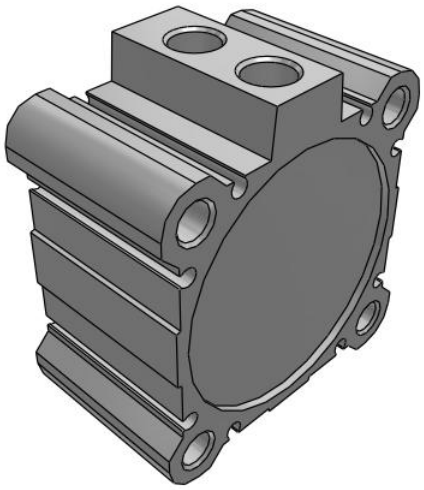

C(D)Q2, Compact Cylinder, Double Acting, Single Rod w/Auto Switch Mounting Groove

CQ2A63TF-10DCZ

Datasheet

General series information

- Double acting, single rod, compact cylinder
- Bore sizes (mm): 12, 16, 20, 25, 32, 40, 50, 63, 80, 100
- Standard stroke range (mm): 5 to 100
- Port threads: M (12 to 25 bore); Rc, NPT or G (32 to 100 bore)
- Can mount small auto switches on 4 surfaces.

Standard specifications

Magnet	None
Mounting	A (Both Ends Tapped)
Type	Standard
Bore Size	Ø63 mm
Port Thread Type	TF
Stroke	10
Body Option	C [Rubber Bumper]
Auto Switch Groove	Z [Auto Switch Mounting Grooves]
Mounting Bolt	None
Rod End Bracket	None
Auto Switch	No Switch
Lead Wire or Prewired Connector	0.5 m or None in the Case of No Switch
Number	2 pcs.
Rod End Options	None
Temperature Resistance	None
Low Speed	None
Made of Stainless Steel	None
Fluororubber Seal	None

Specifications are subject to change without prior notice and any obligation on the part of the manufacturer.

SMC CORPORATION Zuazobidea 14, 01012, Vitoria-Gasteiz, Álava +34 945184100 +34 945184126 www.smc.eu support.marketingeurope@smc.com

Pressure medium	Compressed air
Maximum temperature of pressure medium	70 ºC
Minimum temperature of pressure medium	-10 °C
Maximum operating pressure	1.0 MPa
Minimum operating pressure	0,05 Mpa
Proof pressure	1.5 MPa
Maximum ambient temperature	70 ºC
Minimum ambient temperature	-10 °C
Number of pneumatic connections	2 pcs.
Pneumatic input connection	G 1/4
Mode of operation of drive	Double acting
Theoretical cylinder force, advance stroke (at 0.5 MPa)	1560 N
Theoretical cylinder force, return stroke (at 0.5 MPa)	1400 N
Maximum piston speed	500 mm/s
Geometric form of the piston rod	Single rod
Male thread of rod end	M18 x 1.5
Female thread of rod end	M10 x 1.5
Minimum piston speed	50 mm/s
Weight	0.647 Kg

Specifications are subject to change without prior notice and any obligation on the part of the manufacturer.

SMC CORPORATION Zuazobidea 14, 01012, Vitoria-Gasteiz, Álava +34 945184100 +34 945184126 www.smc.eu support.marketingeurope@smc.com

Dimensions

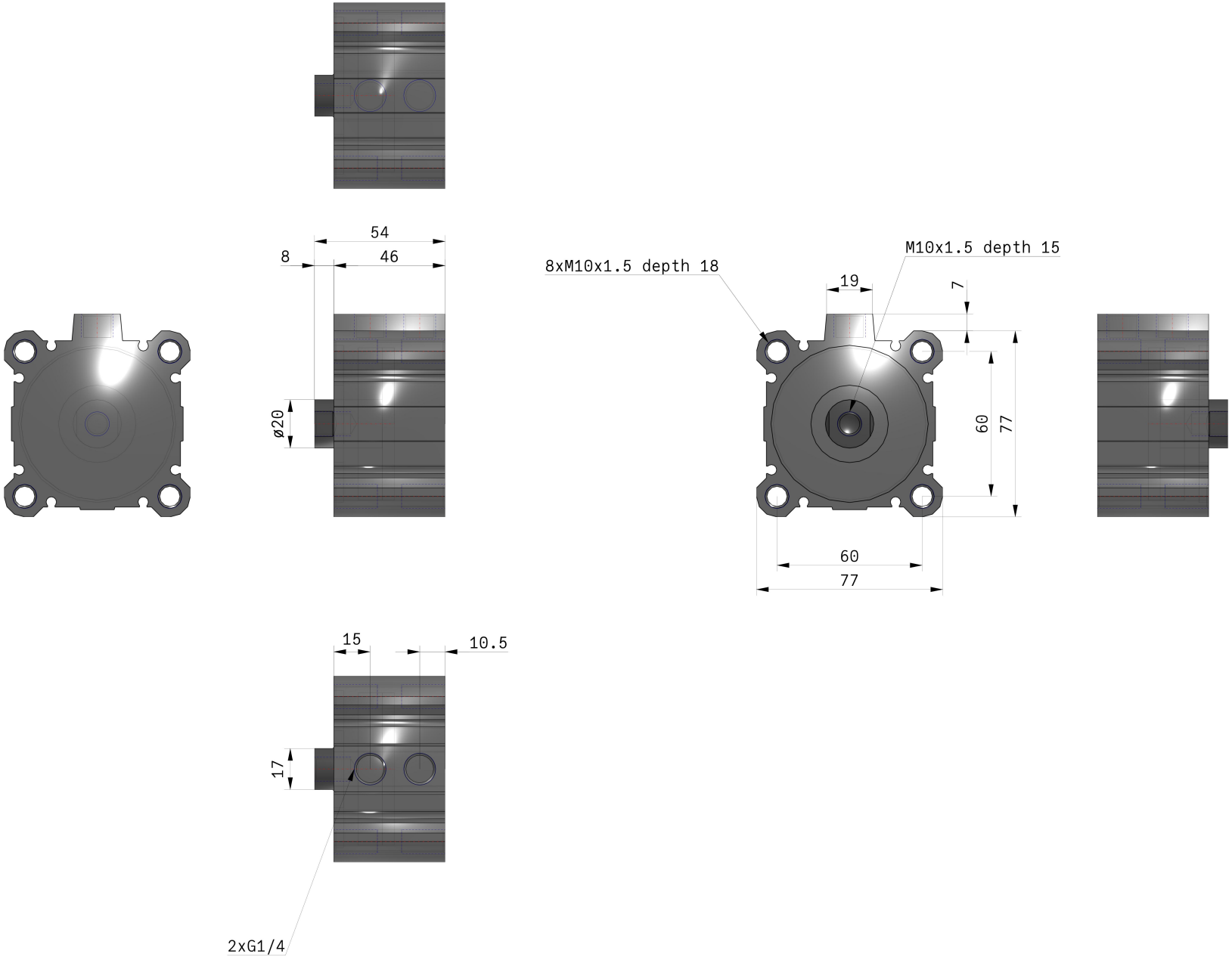

Specifications are subject to change without prior notice and any obligation on the part of the manufacturer.

SMC CORPORATION Zuazobidea 14, 01012, Vitoria-Gasteiz, Álava +34 945184100 +34 945184126 www.smc.eu support.marketingeurope@smc.com

Constructions

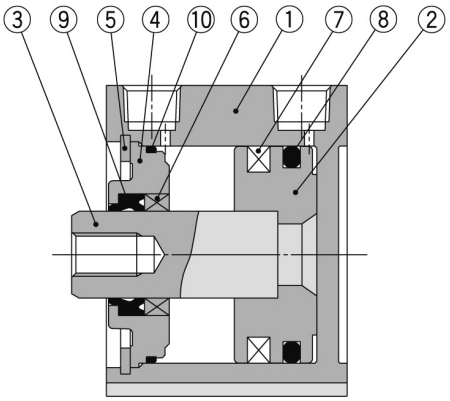

Component Parts

No.	Description	Material	Note
1	**Cylinder tube**	Aluminum alloy	Hard anodised
2	**Piston**	Aluminum alloy	Chromated
3	**Piston rod**	Stainless steel	ø12 to ø25
		Carbon steel	ø32 to ø100, Hard chrome plated
4	**Collar**	Aluminum alloy	ø12 to ø40, Anodised
		Aluminum alloy casted	ø50 to ø100, Chromated, Painted
5	**Retaining ring**	Carbon tool steel	Phosphate coated
6	**Bushing**	Bearing alloy	For ø50 or more only
7	**Magnet**	—	
8	**Piston seal**	NBR	
9	**Rod seal**	NBR	
10	**Gasket**	NBR	

Replacement Parts/Seal Kit (Pneumatic type)

Bore size (mm)	Kit no.	Contents
12	CQ2B12-PS	Kits include items ⑧, ⑨, ⑩ from the table.
16	CQ2B16-PS	
20	CQ2B20-PS	
25	CQ2B25-PS	
32	CQ2B32-PS	
40	CQ2B40-PS	
50	CQ2B50-PS	
63	CQ2B63-PS	
80	CQ2B80-PS	
100	CQ2B100-PS	

∗ Seal kit includes ⑧, ⑨, ⑩. Order the seal kit, based on each bore size.
∗ Since the seal kit does not include a grease pack, order it separately.
Grease pack part no.: GR-S-010 (10 g)

Replacement Parts/Seal Kit (Air-hydro type)

Bore size (mm)	Kit no.	Contents
20	CQ2BH20-PS	Kits include items ⑧, ⑨, ⑩ from the table.
25	CQ2BH25-PS	
32	CQ2BH32-PS	
40	CQ2BH40-PS	
50	CQ2BH50-PS	
63	CQ2BH63-PS	
80	CQ2BH80-PS	
100	CQ2BH100-PS	

∗ Seal kit includes ⑧, ⑨, ⑩. Order the seal kit, based on each bore size.
∗ Since the seal kit does not include a grease pack, order it separately.
Grease pack part no.: GR-S-010 (10 g)

Specifications are subject to change without prior notice and any obligation on the part of the manufacturer.

SMC CORPORATION Zuazobidea 14, 01012, Vitoria-Gasteiz, Álava +34 945184100 +34 945184126 www.smc.eu support.marketingeurope@smc.com

Additional information

Catalogue	CQ2-Z-C_EU.pdf
Operation manuals	OM_CQ2x_OM0002MEN.pdf

Specifications are subject to change without prior notice and any obligation on the part of the manufacturer.

SMC CORPORATION Zuazobidea 14, 01012, Vitoria-Gasteiz, Álava +34 945184100 +34 945184126 www.smc.eu support.marketingeurope@smc.com