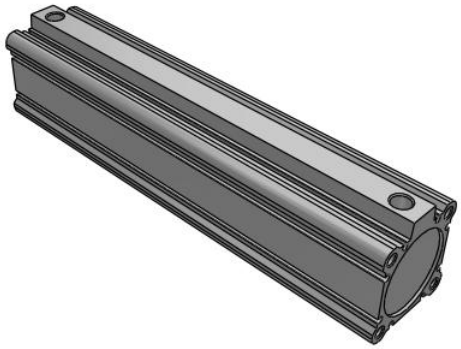

# C(D)Q2, Compact Cylinder, Double Acting Single Rod, Long Stroke w/Auto Switch Mounting Groove

CQ2A50TF-250DCZ

Datasheet

## General series information

- Compact Cylinder: Long Stroke Double Acting, Single Rod
- Bore sizes (mm): 32, 40, 50, 63, 80, 100
- Standard stroke range (mm): 125 to 300
- Port threads: Rc, NPT or G
- Can mount small auto switches on 4 surfaces.

*Double-acting, single-rod cylinder*

## Standard specifications

| | |
|---|---|
| Magnet | None |
| Mounting | A (Both Ends Tapped) |
| Type | Standard |
| Bore Size | Ø50 mm |
| Port Thread Type | TF [G] |
| Stroke | 250 |
| Cushion | C (Rubber Bumper) |
| Body Option | Standard (Rod End Female Thread) |
| Auto Switch | No Switch |
| Lead Wire or Prewired Connector | 0.5 m or None in the Case of No Switch |
| Number | 2 pcs. |
| Rod End Options | None |
| Made of Stainless Steel | None |
| Fluororubber Seal | None |
| Pressure medium | Compressed air |
| Maximum temperature of pressure medium | 70 ºC |
| Minimum temperature of pressure medium | -10 °C |
| Maximum operating pressure | 1.0 MPa |

*Specifications are subject to change without prior notice and any obligation on the part of the manufacturer.*



**SMC CORPORATION** Zuazobidea 14, 01012, Vitoria-Gasteiz, Álava +34 945184100 +34 945184126 www.smc.eu support.marketingeurope@smc.com

| | |
|---|---|
| Minimum operating pressure | 0.05 MPa |
| Proof pressure | 1.5 MPa |
| Maximum ambient temperature | 70 ºC |
| Minimum ambient temperature | -10 °C |
| Number of pneumatic connections | 2 pcs. |
| Pneumatic input connection | G 1/4 |
| Mode of operation of drive | Double acting |
| Maximum piston speed | 500 mm/s |
| Type of cushioning | Elastically |
| Piston rod end | Female-Thread |
| Geometric form of the piston rod | Single rod |
| Male thread of rod end | M18 x 1.5 |
| Female thread of rod end | M10 x 1.5 |
| Minimum piston speed | 50 mm/s |
| Weight | 1.914 Kg |

*Specifications are subject to change without prior notice and any obligation on the part of the manufacturer.*



**SMC CORPORATION** Zuazobidea 14, 01012, Vitoria-Gasteiz, Álava +34 945184100 +34 945184126 www.smc.eu support.marketingeurope@smc.com

# Dimensions

## ø32～ø50

C□Q2Aシリーズ

オートスイッチなし、付とも外形寸法は同じです。

両端タップタイプ

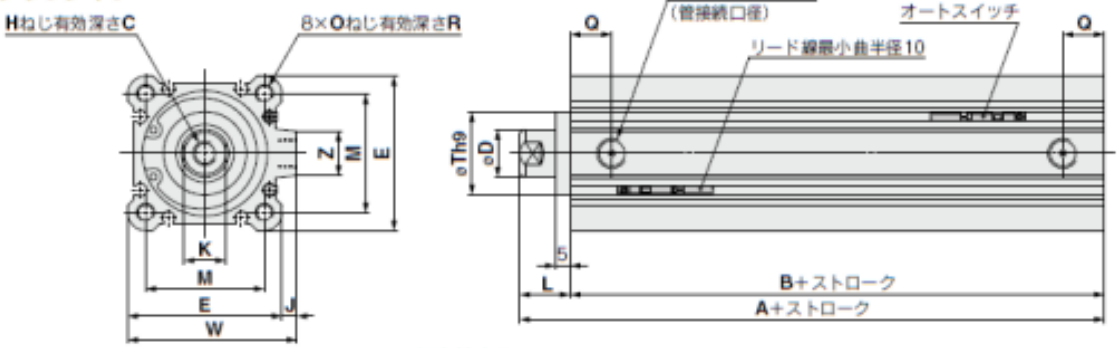


ロッド先端おねじ

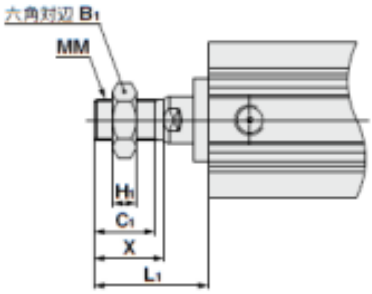


ロッド先端おねじの場合 (mm)

| チューブ内径 (mm) | $B_1$ | $C_1$ | $H_1$ | $L_1$ | MM | X |
|---|---|---|---|---|---|---|
| 32 | 22 | 20.5 | 8 | 38.5 | M14×1.5 | 23.5 |
| 40 | 22 | 20.5 | 8 | 38.5 | M14×1.5 | 23.5 |
| 50 | 27 | 26 | 11 | 43.5 | M18×1.5 | 28.5 |

ワンタッチ管継手内蔵形の寸法はCQ2シリーズ／複動片ロッドと同等です。

Specifications are subject to change without prior notice and any obligation on the part of the manufacturer.



SMC CORPORATION Zuazobidea 14, 01012, Vitoria-Gasteiz, Álava +34 945184100 +34 945184126 www.smc.eu support.marketingeurope@smc.com

# Constructions

**Standard**

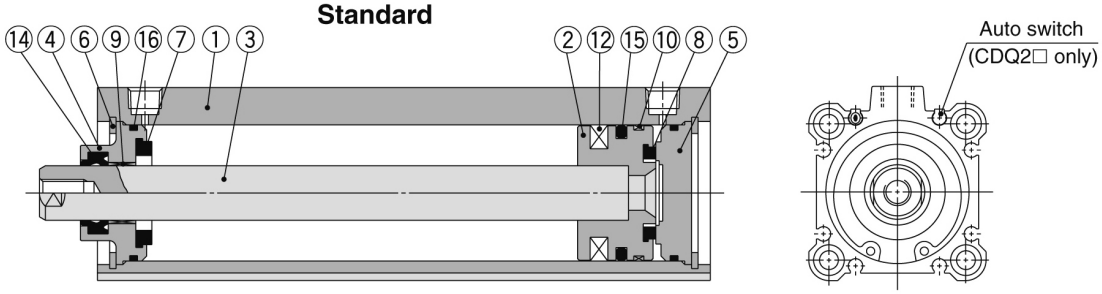


**Rod end male thread**

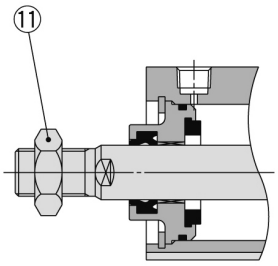


**Built-in one-touch fittings**

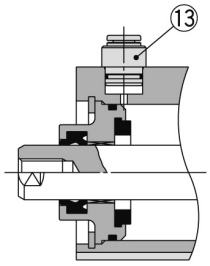


## Component Parts

| No. | Description | Material | Note |
|---|---|---|---|
| 1 | **Cylinder tube** | Aluminum alloy | Hard anodised |
| 2 | **Piston** | Aluminum alloy | Chromated |
| 3 | **Piston rod** | Carbon steel | Hard chrome plated |
| 4 | **Collar** | Aluminum alloy | Anodised |
| 5 | **Bottom plate** | Aluminum alloy | Anodised |
| 6 | **Retaining ring** | Carbon tool steel | Phosphate coated |
| 7 | **Bumper A** | Urethane | |
| 8 | **Bumper B** | Urethane | |
| 9 | **Bushing** | Bearing alloy | |
| 10 | **Wear ring** | Resin | |
| 11 | **Rod end nut** | Carbon steel | Nickel plated |
| 12 | **Magnet** | — | For CDQ2A□ only |
| 13 | **One-touch fitting** | — | ø32 to ø63 |
| 14 * | **Rod seal** | NBR | |
| 15 * | **Piston seal** | NBR | |
| 16 * | **Tube gasket** | NBR | |

## Replacement Parts/Seal Kit

| Bore size (mm) | Kit no. | Contents |
|---|---|---|
| **32** | CQ2A32-L-PS | Kits include items ⑭, ⑮, ⑯ from the table. |
| **40** | CQ2A40-L-PS | |
| **50** | CQ2A50-L-PS | |
| **63** | CQ2A63-L-PS | |
| **80** | CQ2A80-L-PS | |
| **100** | CQ2A100-L-PS | |

* Seal kit includes ⑭, ⑮, ⑯. Order the seal kit, based on each bore size.
* Since the seal kit does not include a grease pack, order it separately.
**Grease pack part no.: GR-S-010** (10 g)

*Specifications are subject to change without prior notice and any obligation on the part of the manufacturer.*



**SMC CORPORATION** Zuazobidea 14, 01012, Vitoria-Gasteiz, Álava +34 945184100 +34 945184126 www.smc.eu support.marketingeurope@smc.com

## Additional information

| | |
|---|---|
| Catalogue | CQ2-Z-D_EU.pdf |
| Operation manuals | OM_CQ2x_OM0002MEN.pdf |

Specifications are subject to change without prior notice and any obligation on the part of the manufacturer.



SMC CORPORATION Zuazobidea 14, 01012, Vitoria-Gasteiz, Álava +34 945184100 +34 945184126 www.smc.eu support.marketingeurope@smc.com