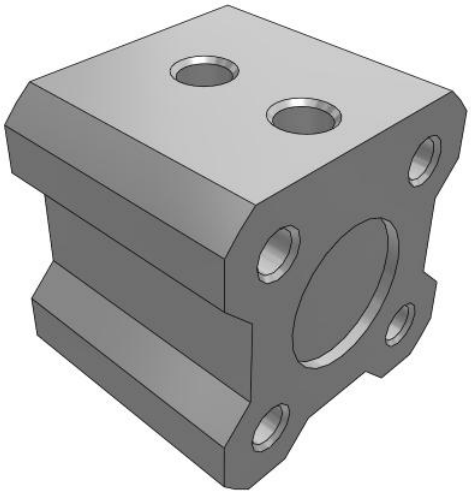

# C(D)Q2, Compact Cylinder, Double Acting, Single Rod w/Auto Switch Mounting Groove

CQ2A12-5D

Datasheet

## General series information

- Double acting, single rod, compact cylinder
- Bore sizes (mm): 12, 16, 20, 25, 32, 40, 50, 63, 80, 100
- Standard stroke range (mm): 5 to 100
- Port threads: M (12 to 25 bore); Rc, NPT or G (32 to 100 bore)
- Can mount small auto switches on 4 surfaces.

## Standard specifications

| | |
|---|---|
| Magnet | None |
| Mounting | A (Both Ends Tapped) |
| Type | Standard |
| Bore Size | Ø12 mm |
| Port Thread Type | Rc (or M Thread for 16 & 20 Bore or 32 stroke 5 mm) |
| Stroke | 5 |
| Body Option | Standard [Rod End Female Thread] |
| Auto Switch Groove | None, also for 12-25 Bore w/o Magnet |
| Mounting Bolt | None |
| Rod End Bracket | None |
| Auto Switch | No Switch |
| Lead Wire or Prewired Connector | 0.5 m or None in the Case of No Switch |
| Number | 2 pcs. |
| Rod End Options | None |
| Temperature Resistance | None |
| Low Speed | None |
| Made of Stainless Steel | None |
| Fluororubber Seal | None |

Specifications are subject to change without prior notice and any obligation on the part of the manufacturer.



SMC CORPORATION Zuazobidea 14, 01012, Vitoria-Gasteiz, Álava +34 945184100 +34 945184126 www.smc.eu support.marketingeurope@smc.com

| | |
|---|---|
| Pressure medium | Compressed air |
| Maximum temperature of pressure medium | 70 ºC |
| Minimum temperature of pressure medium | -10 °C |
| Maximum operating pressure | 1.0 MPa |
| Minimum operating pressure | 0.07 MPa |
| Proof pressure | 1.5 MPa |
| Maximum ambient temperature | 70 ºC |
| Minimum ambient temperature | -10 °C |
| Number of pneumatic connections | 2 pcs. |
| Pneumatic input connection | M5 |
| Mode of operation of drive | Double acting |
| Theoretical cylinder force, advance stroke (at 0.5 MPa) | 57 N |
| Theoretical cylinder force, return stroke (at 0.5 MPa) | 42 N |
| Maximum piston speed | 500 mm/s |
| Geometric form of the piston rod | Single rod |
| Male thread of rod end | M5 x 0.8 |
| Female thread of rod end | M3 x 0.5 |
| Minimum piston speed | 50 mm/s |
| Weight | 0.040 Kg |

*Specifications are subject to change without prior notice and any obligation on the part of the manufacturer.*



**SMC CORPORATION** Zuazobidea 14, 01012, Vitoria-Gasteiz, Álava +34 945184100 +34 945184126 www.smc.eu support.marketingeurope@smc.com

# Dimensions

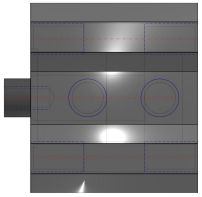

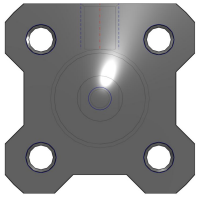

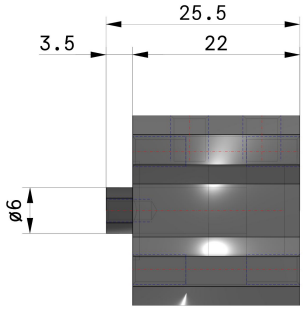


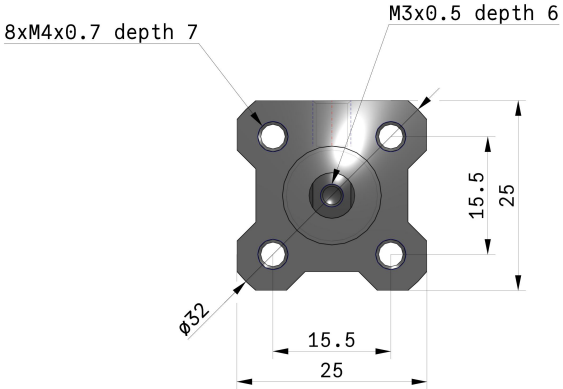


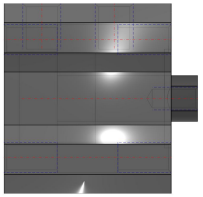

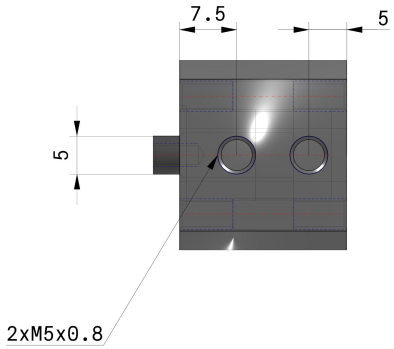


Specifications are subject to change without prior notice and any obligation on the part of the manufacturer.



SMC CORPORATION Zuazobidea 14, 01012, Vitoria-Gasteiz, Álava +34 945184100 +34 945184126 www.smc.eu support.marketingeurope@smc.com

# Constructions

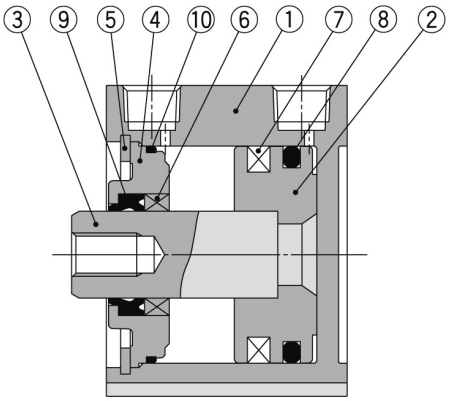


## Component Parts

| No. | Description | Material | Note |
|---|---|---|---|
| 1 | **Cylinder tube** | Aluminum alloy | Hard anodised |
| 2 | **Piston** | Aluminum alloy | Chromated |
| 3 | **Piston rod** | Stainless steel | ø12 to ø25 |
| | | Carbon steel | ø32 to ø100, Hard chrome plated |
| 4 | **Collar** | Aluminum alloy | ø12 to ø40, Anodised |
| | | Aluminum alloy casted | ø50 to ø100, Chromated, Painted |
| 5 | **Retaining ring** | Carbon tool steel | Phosphate coated |
| 6 | **Bushing** | Bearing alloy | For ø50 or more only |
| 7 | **Magnet** | — | |
| 8 | **Piston seal** | NBR | |
| 9 | **Rod seal** | NBR | |
| 10 | **Gasket** | NBR | |

## Replacement Parts/Seal Kit (Pneumatic type)

| Bore size (mm) | Kit no. | Contents |
|---|---|---|
| **12** | CQ2B12-PS | Kits include items ⑧, ⑨, ⑩ from the table. |
| **16** | CQ2B16-PS | |
| **20** | CQ2B20-PS | |
| **25** | CQ2B25-PS | |
| **32** | CQ2B32-PS | |
| **40** | CQ2B40-PS | |
| **50** | CQ2B50-PS | |
| **63** | CQ2B63-PS | |
| **80** | CQ2B80-PS | |
| **100** | CQ2B100-PS | |

∗ Seal kit includes ⑧, ⑨, ⑩. Order the seal kit, based on each bore size.
∗ Since the seal kit does not include a grease pack, order it separately.
**Grease pack part no.: GR-S-010** (10 g)

## Replacement Parts/Seal Kit (Air-hydro type)

| Bore size (mm) | Kit no. | Contents |
|---|---|---|
| **20** | CQ2BH20-PS | Kits include items ⑧, ⑨, ⑩ from the table. |
| **25** | CQ2BH25-PS | |
| **32** | CQ2BH32-PS | |
| **40** | CQ2BH40-PS | |
| **50** | CQ2BH50-PS | |
| **63** | CQ2BH63-PS | |
| **80** | CQ2BH80-PS | |
| **100** | CQ2BH100-PS | |

∗ Seal kit includes ⑧, ⑨, ⑩. Order the seal kit, based on each bore size.
∗ Since the seal kit does not include a grease pack, order it separately.
**Grease pack part no.: GR-S-010** (10 g)

*Specifications are subject to change without prior notice and any obligation on the part of the manufacturer.*



**SMC CORPORATION** Zuazobidea 14, 01012, Vitoria-Gasteiz, Álava +34 945184100 +34 945184126 www.smc.eu support.marketingeurope@smc.com

## Additional information

| | |
|---|---|
| Catalogue | CQ2-Z-C_EU.pdf |
| Operation manuals | OM_CQ2x_OM0002MEN.pdf |

Specifications are subject to change without prior notice and any obligation on the part of the manufacturer.



SMC CORPORATION Zuazobidea 14, 01012, Vitoria-Gasteiz, Álava +34 945184100 +34 945184126 www.smc.eu support.marketingeurope@smc.com