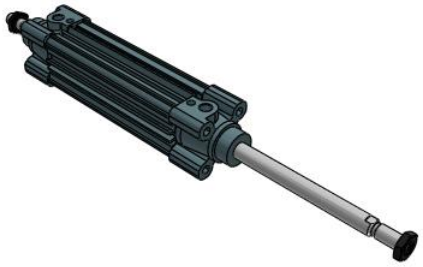

CP96S(D), ISO 15552 Cylinder, Double Acting, Single/Double Rod with Air cushion on both ends and Bumper cushion

CP96SDB32-100CW

Datasheet

General series information

- Double acting, standard type, single or double rod with Air cushion on both ends and Bumper cushion
- Bore sizes (mm): 32, 40, 50, 63, 80, 100
- Standard stroke up to 2000mm
- Auto switch capable

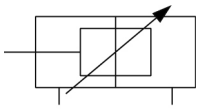

Double-acting cylinder with cushioning adjustable at both ends, single piston rod

Standard specifications

Magnet	D (Built-in)
Mounting	B (Basic)
Bore Size	Ø32 mm
Stroke	100
Rod Boot	w/o Rod Boot
Rod	W (Double Rod)
Auto Switch	No Switch
Lead Wire or Prewired Connector	0.5m [Or None in the Case of No Switch]
Number	2 pcs. [Or None in the Case of No Switch]
Rod End Options	None
Temperature Resistance	None
Heavy Duty Scraper	None
Tie Rod	None
Fluororubber Seal	None
Coil Scraper	None
Made of Stainless Steel (-XC68)	None
Made of Stainless Steel (-XC65)	None
Pressure medium	Compressed air
Maximum temperature of pressure medium with magnet	60 ºC

Specifications are subject to change without prior notice and any obligation on the part of the manufacturer.

SMC CORPORATION Zuazobidea 14, 01012, Vitoria-Gasteiz, Álava +34 945184100 +34 945184126 www.smc.eu emcmarketing@smc.smces.es

Minimum temperature of pressure medium with magnet	-10 ºC (no freezing)
Maximum operating pressure	1.0 MPa
Minimum operating pressure	0.05 MPa
Proof pressure	1.5 MPa
Maximum ambient temperature	70 ºC
Maximum ambient temperature with magnet	60 ºC
Minimum ambient temperature with magnet	-10 ºC (no freezing)
Number of pneumatic connections	2 pcs.
Pneumatic input connection	G 1/8
Pneumatic exhaust connection	G 1/8
Mode of operation of drive	Double acting
Theoretical cylinder force, advance stroke (at 0.5 MPa)	402 N
Theoretical cylinder force, return stroke (at 0.5 MPa)	346 N
Maximum piston speed	1,000 mm/s
Piston rod end	Male thread
Male thread of rod end	M10 x 1.25
Minimum piston speed	50 mm/s
Weight	0.740 Kg

Specifications are subject to change without prior notice and any obligation on the part of the manufacturer.

SMC CORPORATION Zuazobidea 14, 01012, Vitoria-Gasteiz, Álava +34 945184100 +34 945184126 www.smc.eu emcmarketing@smc.smces.es

Dimensions

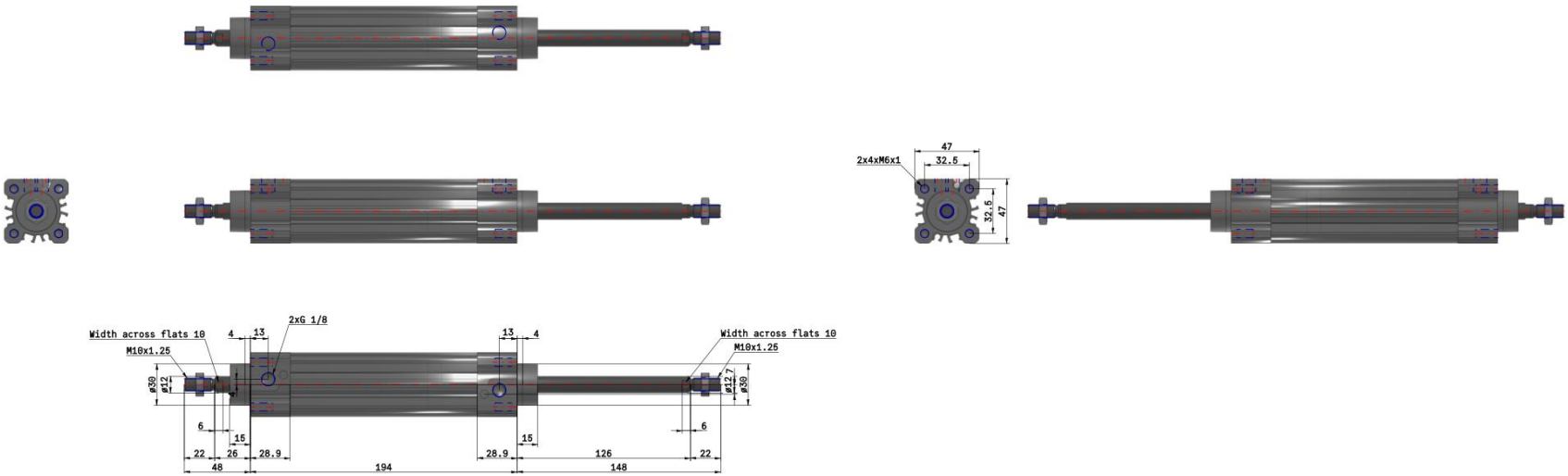

Specifications are subject to change without prior notice and any obligation on the part of the manufacturer.

SMC CORPORATION Zuazobidea 14, 01012, Vitoria-Gasteiz, Álava +34 945184100 +34 945184126 www.smc.eu emcmarketing@smc.smces.es

Constructions

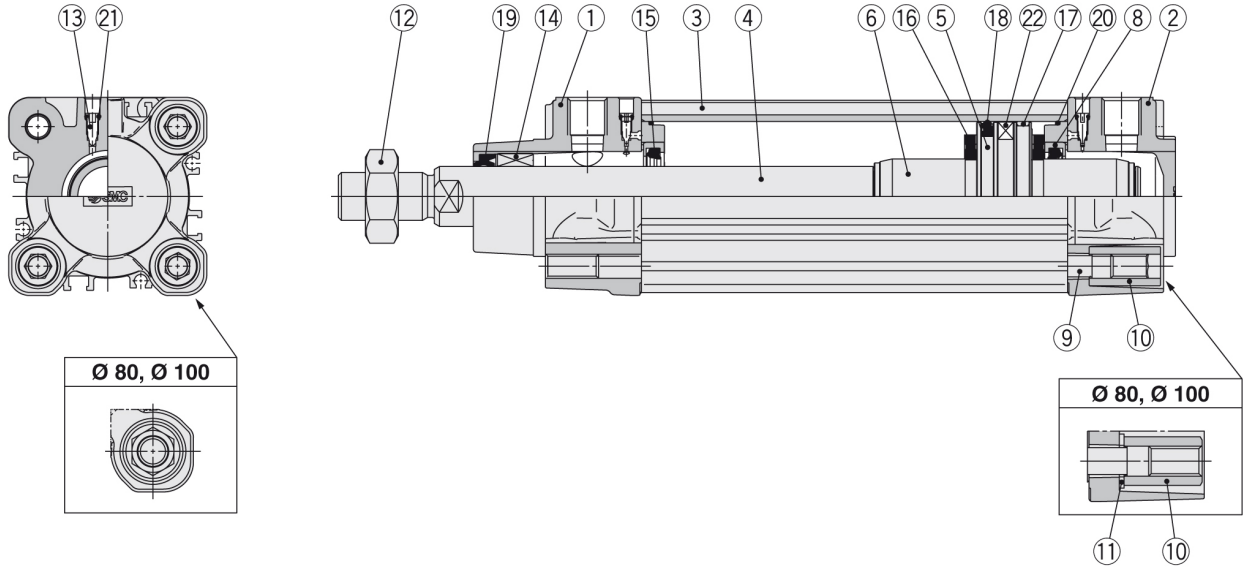

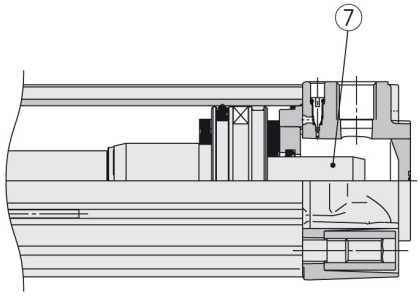

Component Parts

No.	Description	Material	Note
1	**Rod cover**	Aluminium die-cast	
2	**Head cover**	Aluminium die-cast	
3	**Cylinder tube**	Aluminium alloy	
4	**Piston rod**	Carbon steel	
5	**Piston**	Aluminium alloy	Ø 32 to Ø 63
		Aluminium die-cast	Ø 80, Ø 100
6	**Cushion ring A**	Aluminium alloy	
7	**Cushion ring B**	Aluminium alloy	
8	**Cushion seal holder**	Aluminium alloy	
9	**Tie-rod**	Carbon steel	
10	**Tie-rod nut**	Steel	
11	**Flat washer**	Steel	Ø 80, Ø 100
12	**Rod end nut**	Steel	
13	**Cushion valve**	Resin	
14	**Bushing**	Bearing alloy	
15	**Cushion seal**	Urethane	
16	**Bumper**	Urethane	
17	**Wear ring**	Resin	
18	**Piston seal**	NBR	
19	**Rod seal**	NBR	
20	**Cylinder tube gasket**	NBR	
21	**Cushion valve seal**	NBR	
22	**Magnet**		

Replacement Parts/Seal Kit (Single rod)

Bore size [mm]	Kit no.	Contents
32	CS95-32	Kits include items ⑮, ⑰ to ⑳.
40	CS95-40	
50	CS95-50	
63	CS95-63	
80	CS95-80	
100	CS96-100	

Seal Kit (Double rod)

Bore size [mm]	Kit no.	Contents
32	CS95W-32	Kits include items ⑮, ⑱ to ⑳.
40	CS95W-40	
50	CS95W-50	
63	CS95W-63	
80	CS95W-80	
100	CS96W-100	

Specifications are subject to change without prior notice and any obligation on the part of the manufacturer.

SMC CORPORATION Zuazobidea 14, 01012, Vitoria-Gasteiz, Álava +34 945184100 +34 945184126 www.smc.eu emcmarketing@smc.smces.es

Additional information

Catalogue	CP96-Bb_EU.pdf
Operation manuals	OM_CP96x-C_OM0002QEN.pdf

Specifications are subject to change without prior notice and any obligation on the part of the manufacturer.

SMC CORPORATION Zuazobidea 14, 01012, Vitoria-Gasteiz, Álava +34 945184100 +34 945184126 www.smc.eu emcmarketing@smc.smces.es