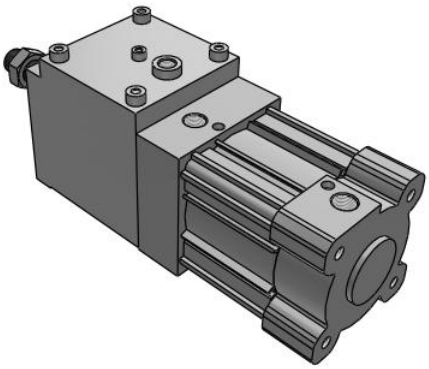

CP96N(D), ISO 15552 Cylinder, Double Acting, Single/Double Rod w/Lock

CP96NDB80-25C

Datasheet

General series information

- Bore sizes (mm): 32, 40, 50, 63, 80, 100.
- Maximum stroke 2000 mm.
- Auto switch capable.

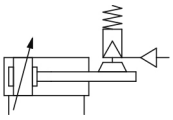

Double-acting cylinder with lock, single piston rod

Standard specifications

Magnet	D (Built-in Magnet)
Mounting	B (Basic)
Bore Size	80 mm
Stroke	25
Rod Boot	w/o Rod Boot
Rod	Single Rod
Pivot Bracket	None
Rod End Bracket	None
Auto Switch	No Switch
Lead Wire or Pre-wired Connector	0.5 m (Or None in the Case of No Switch)
Number	2 pcs. (Or None in Case of No Switch)
Rod End Options	None
Maximum operating pressure	1.0 MPa
Proof pressure	1.5 MPa
Theoretical cylinder force, advance stroke (at 0.5 MPa)	2514 N
Theoretical cylinder force, return stroke (at 0.5 MPa)	2268 N
Type of cushioning	Air cushion on both ends + bumper cushion
Port size	G3/8
Lubrication	Not required (non-lube)
Fluid	Air

Specifications are subject to change without prior notice and any obligation on the part of the manufacturer.

SMC CORPORATION Zuazobidea 14, 01012, Vitoria-Gasteiz, Álava +34 945184100 +34 945184126 www.smc.eu support.marketingeurope@smc.com

Ambient and fluid temperature	–10 - 70 °C
Stroke length tolerance	Up to 500 st: +2.0 0 , 501 to 1000 st: +2.4 0 , 1001 to 1500 st: +2.8 0 , 1501 to 2000 st: +3.2 0
Piston speed	50 - 1000 mm/s
Action	Double Acting
Locking action	Exhaust locking
Locking direction	Both directions
Stopping accuracy	±1.0 mm
Lock unit: max.operating pressure	1.0 MPa
Lock unit: min.operating pressure	0.3 MPa
Holding force (max.static load)	3920 N
Weight	0.512 Kg

Specifications are subject to change without prior notice and any obligation on the part of the manufacturer.

SMC CORPORATION Zuazobidea 14, 01012, Vitoria-Gasteiz, Álava +34 945184100 +34 945184126 www.smc.eu support.marketingeurope@smc.com

Dimensions

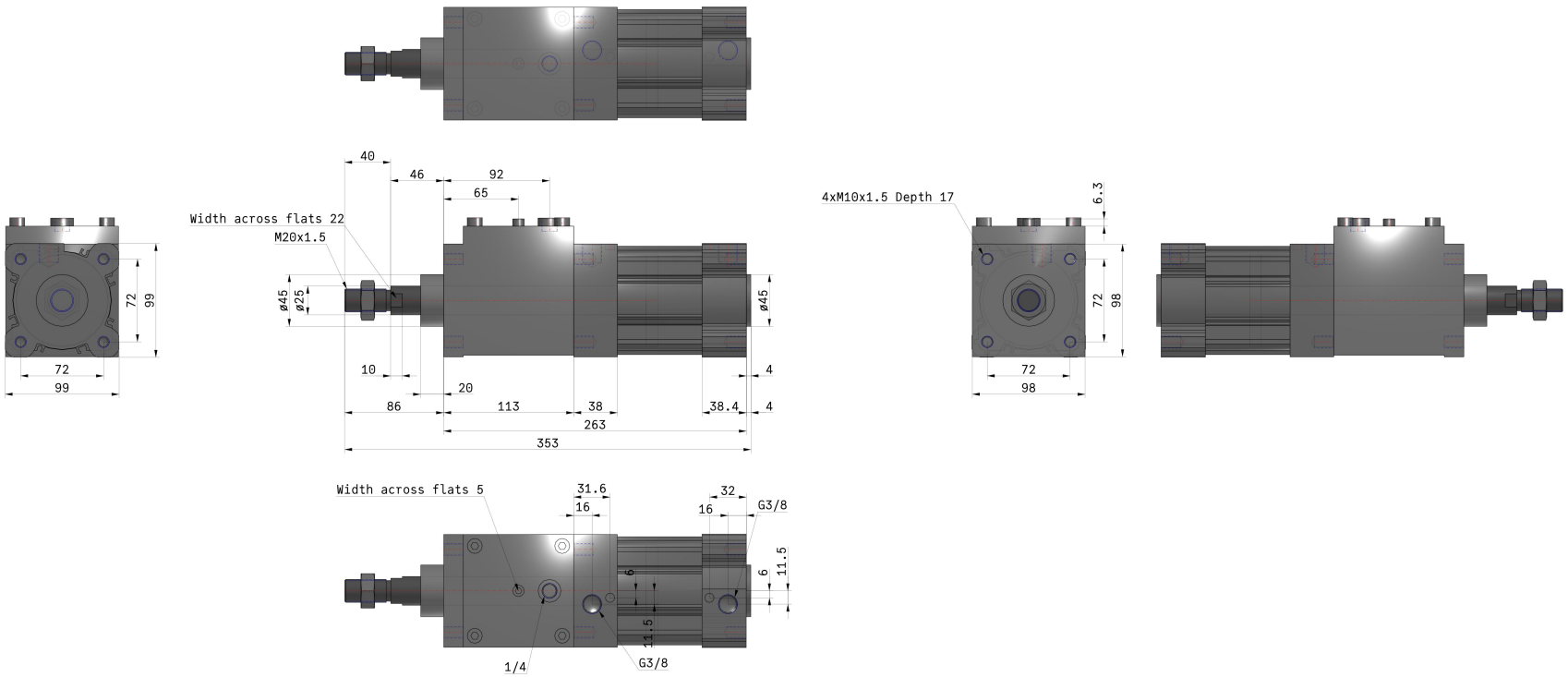

Specifications are subject to change without prior notice and any obligation on the part of the manufacturer.

SMC CORPORATION Zuazobidea 14, 01012, Vitoria-Gasteiz, Álava +34 945184100 +34 945184126 www.smc.eu support.marketingeurope@smc.com

Constructions

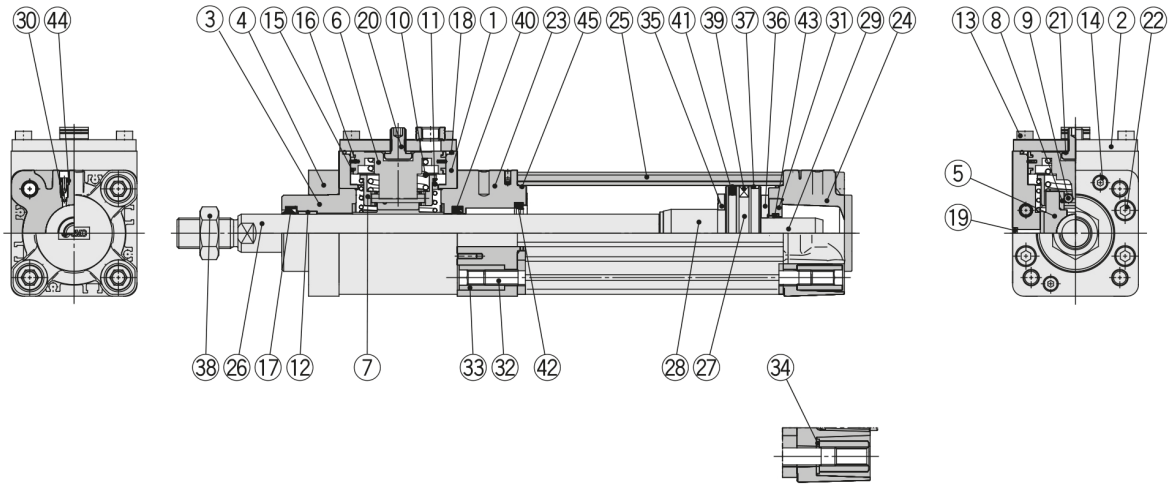

Ø 80, Ø 100

No.	Description	Material	Qty.	Note
1	**Brake unit**	Aluminium alloy	1	Hard anodised
2	**Cap**	Rolled steel	1	Zinc chromated
3	**Collar**	Aluminium alloy	1	Chromated
4	**Retaining plate**	Aluminium alloy	1	Anodised
5	**Brake pad**	Cast iron	1	
6	**Piston A**	Aluminium alloy	1	
7	**Roller holder**	Carbon steel	1	
8	**Roller receiver**	Stainless steel	2	
9	**Needle roller**	Carbon steel	2	
10	**Piston spring**	Spring steel	1	Zinc chromated
11	**Roller spring**	Spring steel	1	Zinc chromated
12	**Bushing**	Bearing alloy	1	
13	Hexagon socket head cap screw	Alloy steel	4	
14	Hexagon socket head cap screw	Alloy steel	2	
15	**Wear ring A**	Resin	2	
16	**Piston seal A**	NBR	1	
17	**Rod seal A**	NBR	1	
18	**Gasket**	NBR	1	
19	**Element**	Bronze	1	
20	**Release bolt**	Alloy steel	1	
21	**Seal washer**	NBR + Stainless steel	1	
22	Hexagon socket head cap screw	Alloy steel	4	
23	**Rod cover**	Aluminium alloy	1	Anodised
24	**Head cover**	Aluminium die-cast	1	Chromated
25	**Cylinder tube**	Aluminium alloy	1	Hard anodised
26	**Piston rod**	Carbon steel	1	Hard chrome plating
27	**Piston B**	Aluminium alloy	1	Ø 32 to Ø 63
		Aluminium die-cast	1	Ø 80, Ø 100
28	**Cushion ring**	Aluminium alloy	1	Anodised
29	**Cushion ring B**	Aluminium alloy	1	Anodised
30	**Cushion valve**	Resin	2	
31	**Cushion seal holder**	Aluminium alloy	1	Anodised

No.	Description	Material	Qty.	Note
32	**Tie-rod**	Carbon steel	4	Zinc chromated
33	**Tie-rod nut**	Rolled steel	8	Zinc chromated
34	**Flat washer**	Steel	8	Ø 80, Ø 100
35	**Bumper A**	Urethane	1	
36	**Bumper B**	Urethane	1	
37	**Wear ring B**	Resin	1	
38	**Rod end nut**	Carbon steel	1	Zinc chromated
39	**Magnet**	—	(1)	
40	**Rod seal B**	NBR	1	
41	**Piston seal B**	NBR	1	
42	**Cushion seal A**	Urethane	1	
43	**Cushion seal B**	Urethane	1	
44	**Cushion valve seal**	NBR	2	
45	**Cylinder tube gasket**	NBR	2	

Specifications are subject to change without prior notice and any obligation on the part of the manufacturer.

SMC CORPORATION Zuazobidea 14, 01012, Vitoria-Gasteiz, Álava +34 945184100 +34 945184126 www.smc.eu support.marketingeurope@smc.com

Additional information

Catalogue	CP96N-C96N-A_EU.pdf
Operation manuals	OM_MWB_OM0078Q-EN.pdf OM_CP96N_OM0197QEN.pdf

Specifications are subject to change without prior notice and any obligation on the part of the manufacturer.

SMC CORPORATION Zuazobidea 14, 01012, Vitoria-Gasteiz, Álava +34 945184100 +34 945184126 www.smc.eu support.marketingeurope@smc.com