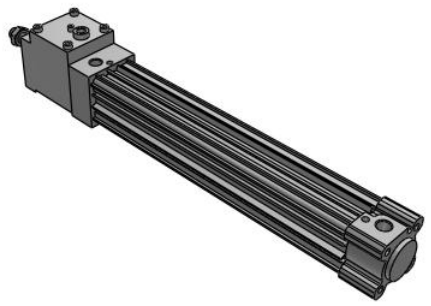

CP96N(D), ISO 15552 Cylinder, Double Acting, Single/Double Rod w/Lock

CP96NDB40-250C

Datasheet

General series information

- Bore sizes (mm): 32, 40, 50, 63, 80, 100.
- Maximum stroke 2000 mm.
- Auto switch capable.

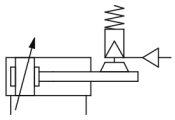

Double-acting cylinder with lock, single piston rod

Standard specifications

Magnet	D (Built-in Magnet)
Mounting	B (Basic)
Bore Size	40 mm
Stroke	250
Rod Boot	w/o Rod Boot
Rod	Single Rod
Pivot Bracket	None
Rod End Bracket	None
Auto Switch	No Switch
Lead Wire or Prewired Connector	0.5m (Or None in the Case of No Switch)
Number	2 pcs. (Or None in the Case of No Switch)
Rod End Options	None
Maximum operating pressure	1.0 MPa
Proof pressure	1.5 MPa
Theoretical cylinder force, advance stroke (at 0.5 MPa)	629 N
Theoretical cylinder force, return stroke (at 0.5 MPa)	528 N
Type of cushioning	Air cushion on both ends + bumper cushion
Port size	G1/4
Lubrication	Not required (non-lube)
Fluid	Air

Specifications are subject to change without prior notice and any obligation on the part of the manufacturer.

SMC CORPORATION Zuazobidea 14, 01012, Vitoria-Gasteiz, Álava +34 945184100 +34 945184126 www.smc.eu emcmarketing@smc.smces.es

Ambient and fluid temperature	–10 - 70 °C
Stroke length tolerance	Up to 500 st: +2.0 0 , 501 to 1000 st: +2.4 0 , 1001 to 1500 st: +2.8 0 , 1501 to 2000 st: +3.2 0
Piston speed	50 - 1000 mm/s
Action	Double Acting
Locking action	Exhaust locking
Locking direction	Both directions
Stopping accuracy	±1.0 mm
Lock unit: max.operating pressure	1.0 MPa
Lock unit: min.operating pressure	0.3 MPa
Holding force (max.static load)	980 N
Weight	1.616 Kg

Specifications are subject to change without prior notice and any obligation on the part of the manufacturer.

SMC CORPORATION Zuazobidea 14, 01012, Vitoria-Gasteiz, Álava +34 945184100 +34 945184126 www.smc.eu emcmarketing@smc.smces.es

Dimensions

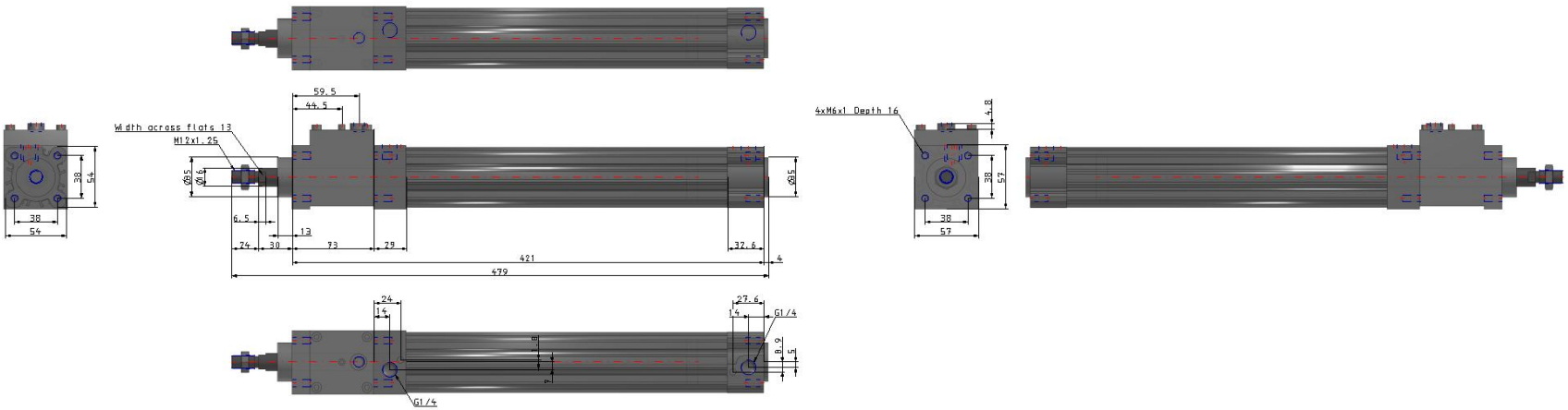

Specifications are subject to change without prior notice and any obligation on the part of the manufacturer.

SMC CORPORATION Zuazobidea 14, 01012, Vitoria-Gasteiz, Álava +34 945184100 +34 945184126 www.smc.eu emcmarketing@smc.smces.es

Constructions

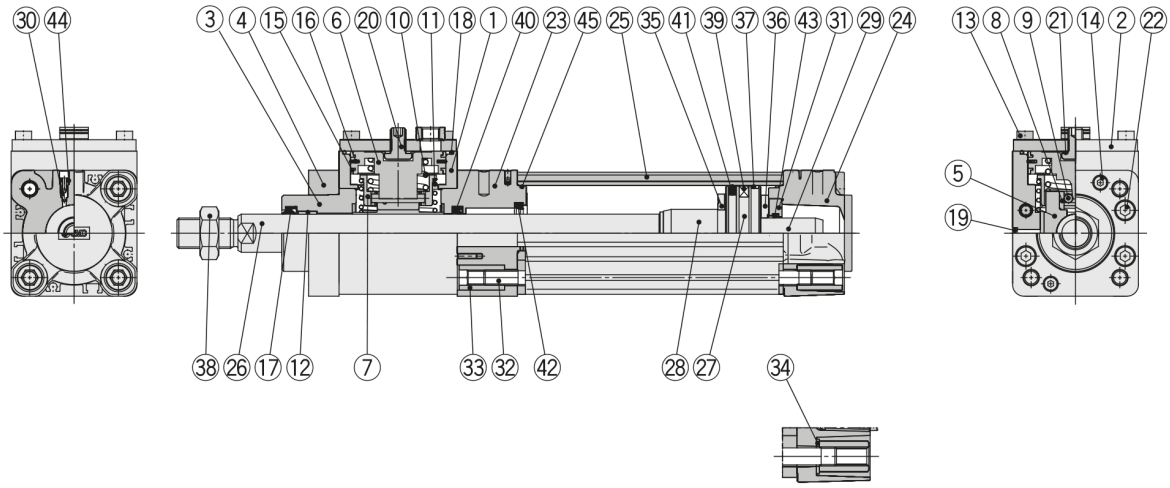

Ø 80, Ø 100

No.	Description	Material	Qty.	Note
1	**Brake unit**	Aluminium alloy	1	Hard anodised
2	**Cap**	Rolled steel	1	Zinc chromated
3	**Collar**	Aluminium alloy	1	Chromated
4	**Retaining plate**	Aluminium alloy	1	Anodised
5	**Brake pad**	Cast iron	1	
6	**Piston A**	Aluminium alloy	1	
7	**Roller holder**	Carbon steel	1	
8	**Roller receiver**	Stainless steel	2	
9	**Needle roller**	Carbon steel	2	
10	**Piston spring**	Spring steel	1	Zinc chromated
11	**Roller spring**	Spring steel	1	Zinc chromated
12	**Bushing**	Bearing alloy	1	
13	Hexagon socket head cap screw	Alloy steel	4	
14	Hexagon socket head cap screw	Alloy steel	2	
15	**Wear ring A**	Resin	2	
16	**Piston seal A**	NBR	1	
17	**Rod seal A**	NBR	1	
18	**Gasket**	NBR	1	
19	**Element**	Bronze	1	
20	**Release bolt**	Alloy steel	1	
21	**Seal washer**	NBR + Stainless steel	1	
22	Hexagon socket head cap screw	Alloy steel	4	
23	**Rod cover**	Aluminium alloy	1	Anodised
24	**Head cover**	Aluminium die-cast	1	Chromated
25	**Cylinder tube**	Aluminium alloy	1	Hard anodised
26	**Piston rod**	Carbon steel	1	Hard chrome plating
27	**Piston B**	Aluminium alloy	1	Ø 32 to Ø 63
		Aluminium die-cast	1	Ø 80, Ø 100
28	**Cushion ring**	Aluminium alloy	1	Anodised
29	**Cushion ring B**	Aluminium alloy	1	Anodised
30	**Cushion valve**	Resin	2	
31	**Cushion seal holder**	Aluminium alloy	1	Anodised

No.	Description	Material	Qty.	Note
32	**Tie-rod**	Carbon steel	4	Zinc chromated
33	**Tie-rod nut**	Rolled steel	8	Zinc chromated
34	**Flat washer**	Steel	8	Ø 80, Ø 100
35	**Bumper A**	Urethane	1	
36	**Bumper B**	Urethane	1	
37	**Wear ring B**	Resin	1	
38	**Rod end nut**	Carbon steel	1	Zinc chromated
39	**Magnet**	—	(1)	
40	**Rod seal B**	NBR	1	
41	**Piston seal B**	NBR	1	
42	**Cushion seal A**	Urethane	1	
43	**Cushion seal B**	Urethane	1	
44	**Cushion valve seal**	NBR	2	
45	**Cylinder tube gasket**	NBR	2	

Specifications are subject to change without prior notice and any obligation on the part of the manufacturer.

SMC CORPORATION Zuazobidea 14, 01012, Vitoria-Gasteiz, Álava +34 945184100 +34 945184126 www.smc.eu emcmarketing@smc.smces.es

Additional information

Catalogue	CP96N-C96N-A_EU.pdf
Operation manuals	OM_MWB_OM0078Q-EN.pdf OM_CP96N_OM0197QEN.pdf

Specifications are subject to change without prior notice and any obligation on the part of the manufacturer.

SMC CORPORATION Zuazobidea 14, 01012, Vitoria-Gasteiz, Álava +34 945184100 +34 945184126 www.smc.eu emcmarketing@smc.smces.es