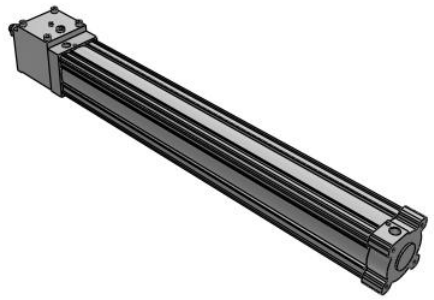

# CP96N(D), ISO 15552 Cylinder, Double Acting, Single/Double Rod w/Lock

## CP96NDB100-800C

Datasheet

## General series information

- Bore sizes (mm): 32, 40, 50, 63, 80, 100.
- Maximum stroke 2000 mm.
- Auto switch capable.

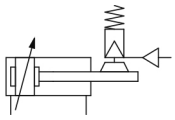

*Double-acting cylinder with lock, single piston rod*

## Standard specifications

| | |
|---|---|
| Magnet | D (Built-in Magnet) |
| Mounting | B (Basic) |
| Bore Size | 100 mm |
| Stroke | 800 |
| Rod Boot | w/o Rod Boot |
| Rod | Single Rod |
| Pivot Bracket | None |
| Rod End Bracket | None |
| Auto Switch | No Switch |
| Lead Wire or Pre-wired Connector | 0.5 m (Or None in the Case of No Switch) |
| Number | 2 pcs. (Or None in Case of No Switch) |
| Rod End Options | None |
| Maximum operating pressure | 1.0 MPa |
| Proof pressure | 1.5 MPa |
| Theoretical cylinder force, advance stroke (at 0.5 MPa) | 3927 N |
| Theoretical cylinder force, return stroke (at 0.5 MPa) | 3574 N |
| Type of cushioning | Air cushion on both ends + bumper cushion |
| Port size | G1/2 |
| Lubrication | Not required (non-lube) |
| Fluid | Air |

*Specifications are subject to change without prior notice and any obligation on the part of the manufacturer.*



**SMC CORPORATION** Zuazobidea 14, 01012, Vitoria-Gasteiz, Álava +34 945184100 +34 945184126 www.smc.eu support.marketingeurope@smc.com

| | |
|---|---|
| Ambient and fluid temperature | –10 - 70 °C |
| Stroke length tolerance | Up to 500 st: +2.0<br>0 , 501 to 1000 st: +2.4<br>0 , 1001 to 1500 st: +2.8<br>0 , 1501 to 2000 st: +3.2<br>0 |
| Piston speed | 50 - 1000 mm/s |
| Action | Double Acting |
| Locking action | Exhaust locking |
| Locking direction | Both directions |
| Stopping accuracy | ±1.0 mm |
| Lock unit: max.operating pressure | 1.0 MPa |
| Lock unit: min.operating pressure | 0.3 MPa |
| Holding force (max.static load) | 6080 N |
| Weight | 19.205 Kg |

Specifications are subject to change without prior notice and any obligation on the part of the manufacturer.



SMC CORPORATION Zuazobidea 14, 01012, Vitoria-Gasteiz, Álava +34 945184100 +34 945184126 www.smc.eu support.marketingeurope@smc.com

# Dimensions

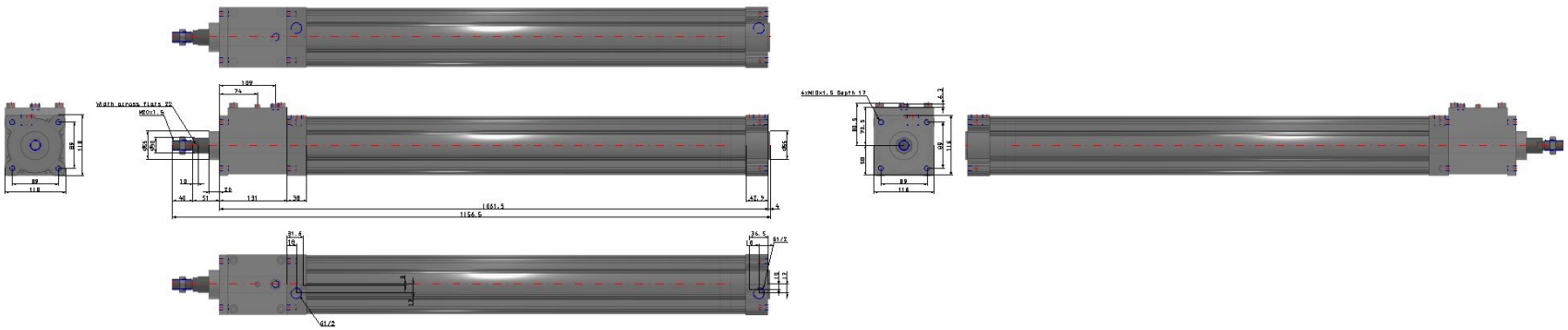


Specifications are subject to change without prior notice and any obligation on the part of the manufacturer.



SMC CORPORATION Zuazobidea 14, 01012, Vitoria-Gasteiz, Álava +34 945184100 +34 945184126 www.smc.eu support.marketingeurope@smc.com

# Constructions

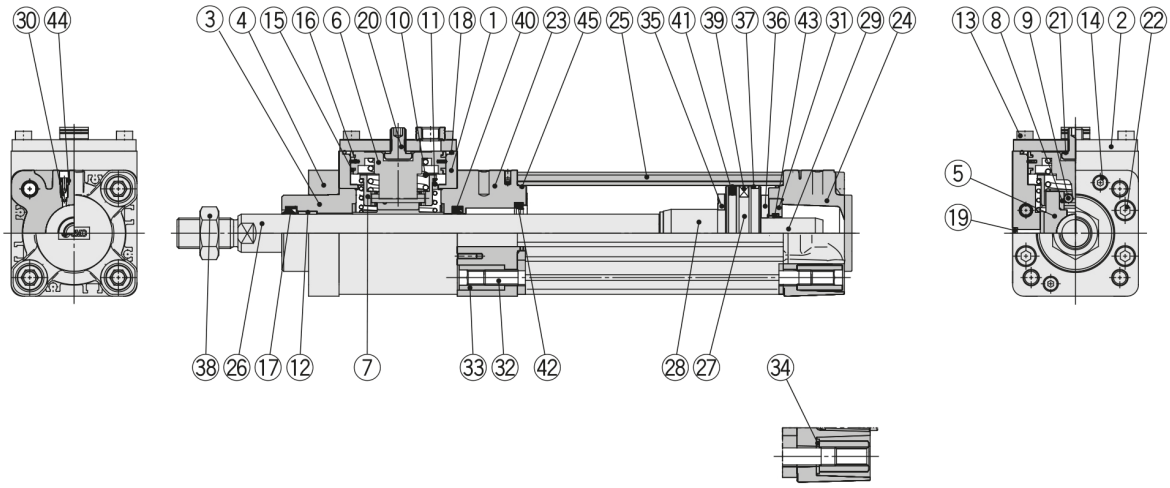


**Ø 80, Ø 100**

| No. | Description | Material | Qty. | Note |
|---|---|---|---|---|
| 1 | **Brake unit** | Aluminium alloy | 1 | Hard anodised |
| 2 | **Cap** | Rolled steel | 1 | Zinc chromated |
| 3 | **Collar** | Aluminium alloy | 1 | Chromated |
| 4 | **Retaining plate** | Aluminium alloy | 1 | Anodised |
| 5 | **Brake pad** | Cast iron | 1 | |
| 6 | **Piston A** | Aluminium alloy | 1 | |
| 7 | **Roller holder** | Carbon steel | 1 | |
| 8 | **Roller receiver** | Stainless steel | 2 | |
| 9 | **Needle roller** | Carbon steel | 2 | |
| 10 | **Piston spring** | Spring steel | 1 | Zinc chromated |
| 11 | **Roller spring** | Spring steel | 1 | Zinc chromated |
| 12 | **Bushing** | Bearing alloy | 1 | |
| 13 | Hexagon socket head cap screw | Alloy steel | 4 | |
| 14 | Hexagon socket head cap screw | Alloy steel | 2 | |
| 15 | **Wear ring A** | Resin | 2 | |
| 16 | **Piston seal A** | NBR | 1 | |
| 17 | **Rod seal A** | NBR | 1 | |
| 18 | **Gasket** | NBR | 1 | |
| 19 | **Element** | Bronze | 1 | |
| 20 | **Release bolt** | Alloy steel | 1 | |
| 21 | **Seal washer** | NBR + Stainless steel | 1 | |
| 22 | Hexagon socket head cap screw | Alloy steel | 4 | |
| 23 | **Rod cover** | Aluminium alloy | 1 | Anodised |
| 24 | **Head cover** | Aluminium die-cast | 1 | Chromated |
| 25 | **Cylinder tube** | Aluminium alloy | 1 | Hard anodised |
| 26 | **Piston rod** | Carbon steel | 1 | Hard chrome plating |
| 27 | **Piston B** | Aluminium alloy | 1 | Ø 32 to Ø 63 |
| | | Aluminium die-cast | 1 | Ø 80, Ø 100 |
| 28 | **Cushion ring** | Aluminium alloy | 1 | Anodised |
| 29 | **Cushion ring B** | Aluminium alloy | 1 | Anodised |
| 30 | **Cushion valve** | Resin | 2 | |
| 31 | **Cushion seal holder** | Aluminium alloy | 1 | Anodised |

| No. | Description | Material | Qty. | Note |
|---|---|---|---|---|
| 32 | **Tie-rod** | Carbon steel | 4 | Zinc chromated |
| 33 | **Tie-rod nut** | Rolled steel | 8 | Zinc chromated |
| 34 | **Flat washer** | Steel | 8 | Ø 80, Ø 100 |
| 35 | **Bumper A** | Urethane | 1 | |
| 36 | **Bumper B** | Urethane | 1 | |
| 37 | **Wear ring B** | Resin | 1 | |
| 38 | **Rod end nut** | Carbon steel | 1 | Zinc chromated |
| 39 | **Magnet** | — | (1) | |
| 40 | **Rod seal B** | NBR | 1 | |
| 41 | **Piston seal B** | NBR | 1 | |
| 42 | **Cushion seal A** | Urethane | 1 | |
| 43 | **Cushion seal B** | Urethane | 1 | |
| 44 | **Cushion valve seal** | NBR | 2 | |
| 45 | **Cylinder tube gasket** | NBR | 2 | |

*Specifications are subject to change without prior notice and any obligation on the part of the manufacturer.*



**SMC CORPORATION** Zuazobidea 14, 01012, Vitoria-Gasteiz, Álava +34 945184100 +34 945184126 www.smc.eu support.marketingeurope@smc.com

## Additional information

| | |
|---|---|
| Catalogue | CP96N-C96N-A_EU.pdf |
| Operation manuals | OM_MWB_OM0078Q-EN.pdf<br>OM_CP96N_OM0197QEN.pdf |

Specifications are subject to change without prior notice and any obligation on the part of the manufacturer.



SMC CORPORATION Zuazobidea 14, 01012, Vitoria-Gasteiz, Álava +34 945184100 +34 945184126 www.smc.eu support.marketingeurope@smc.com