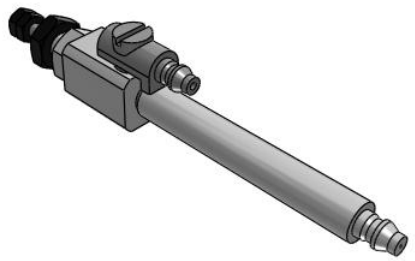

CJ1, Air Cylinder, Double Acting, Single Rod

CJ1B4-20U4

Datasheet

General series information

- Air cylinder
- Double acting, single rod
- Bore size: 4mm
- Mounting: basic
- Non switch capable

Double-acting, single-rod cylinder

Standard specifications

Stroke	20 mm
Maximum operating pressure	0.7 MPa
Minimum operating pressure	0.2 MPa
Proof pressure	1.05 MPa
Type of cushioning	None
Lubrication	Not required (non-lube)
Ambient and fluid temperature	-10 to 70°C
Stroke length tolerance	+0.5
Thread Tolerance	JIS class 2
Piston speed	50 to 500 mm/s
Weight	0.013 Kg

Specifications are subject to change without prior notice and any obligation on the part of the manufacturer.

SMC United Kingdom +34 945184126 sales@smc.uk

Dimensions

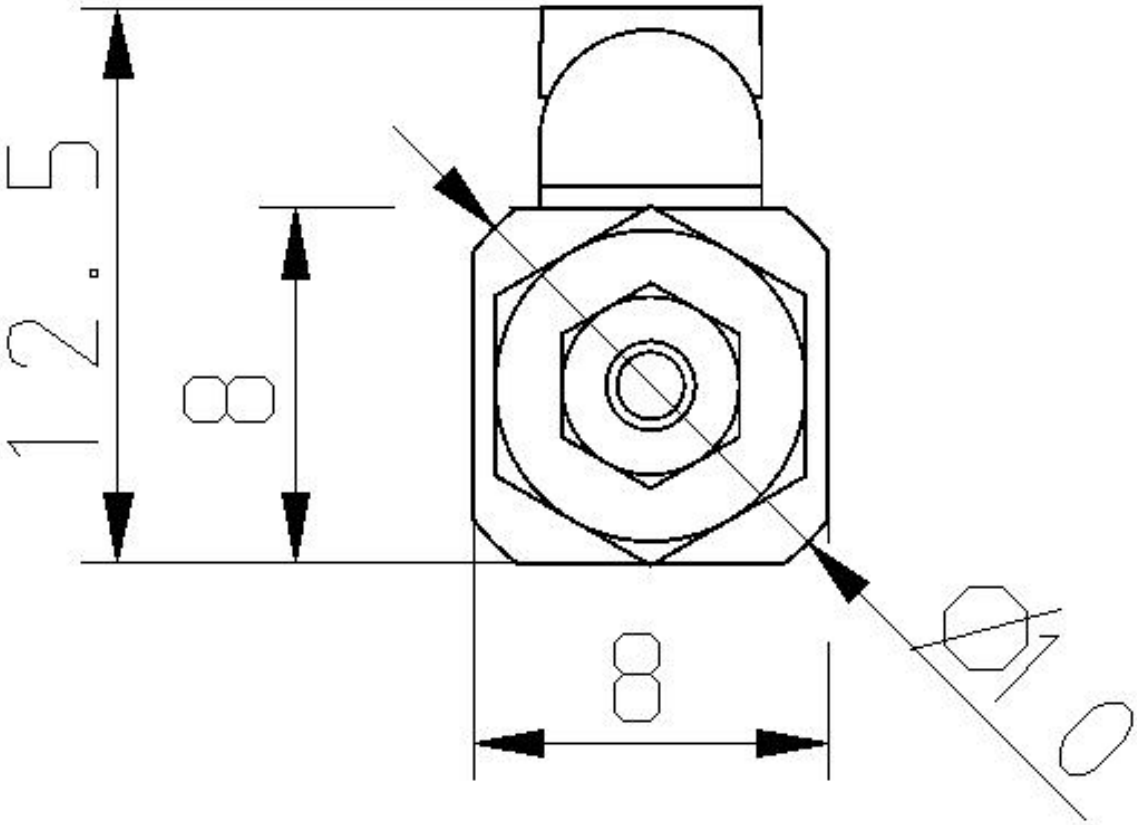

Specifications are subject to change without prior notice and any obligation on the part of the manufacturer.

SMC United Kingdom +34 945184126 sales@smc.uk

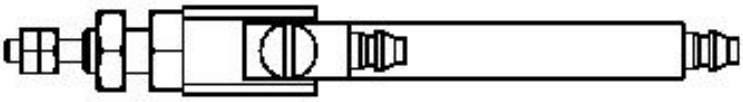

Specifications are subject to change without prior notice and any obligation on the part of the manufacturer.

SMC United Kingdom +34 945184126 sales@smc.uk

Constructions

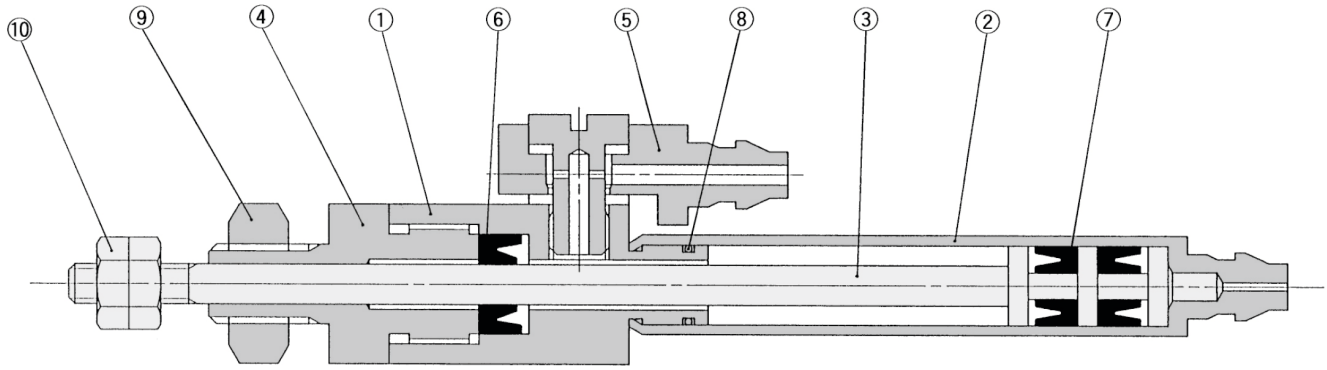

Component Parts

No.	Description	Material	Note
①	Rod cover	Brass	Electroless nickel plated
②	Cylinder tube	Brass	Electroless nickel plated
③	Piston	Stainless steel	
④	Seal retainer	Brass	Electroless nickel plated
⑤	Fittings	Body Brass	Electroless nickel plated
		Gasket PVC	
⑥	Rod seal	NBR	
⑦	Piston seal	NBR	
⑧	Tube gasket	NBR	
⑨	Mounting nut	Steel	Nickel plated
⑩	Rod end nut	Steel	Nickel plated

Specifications are subject to change without prior notice and any obligation on the part of the manufacturer.

SMC United Kingdom +34 945184126 sales@smc.uk

Additional information

Catalogue	CJ1_EU.pdf

Specifications are subject to change without prior notice and any obligation on the part of the manufacturer.

SMC United Kingdom +34 945184126 sales@smc.uk