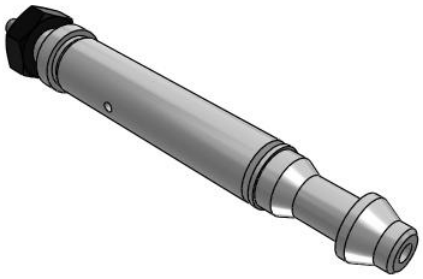

# CJ1, Single Acting, Spring Return
## CJ1B2-5SU4

Datasheet

## General series information

- Air cylinder
- Single acting, spring return
- Bore size: 2.5mm, 4mm
- Mounting: basic
- Non switch capable

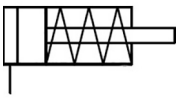

*Single-acting cylinder, single piston rod, return stroke by spring*

## Standard specifications

| | |
|---|---|
| Mounting | B (Basic Style) |
| Bore Size | 2.5 mm |
| Stroke | 5 mm |
| Applicable Tubing | U4 (Polyurethane:OD4, ID2.5 Soft Nylon:OD4, ID2.5) |
| Maximum operating pressure | 0.7 MPa |
| Minimum operating pressure | 0.3 MPa |
| Proof pressure | 1.05 MPa |
| Type of cushioning | None |
| Lubrication | Not required (non-lube) |
| Ambient and fluid temperature | -10 to 70°C |
| Stroke length tolerance | +0.5 |
| Thread Tolerance | JIS class 2 |
| Piston speed | 50 to 500 mm/s |
| Weight | 0.001 Kg |

*Specifications are subject to change without prior notice and any obligation on the part of the manufacturer.*



SMC United Kingdom +34 945184126 sales@smc.uk

## Dimensions

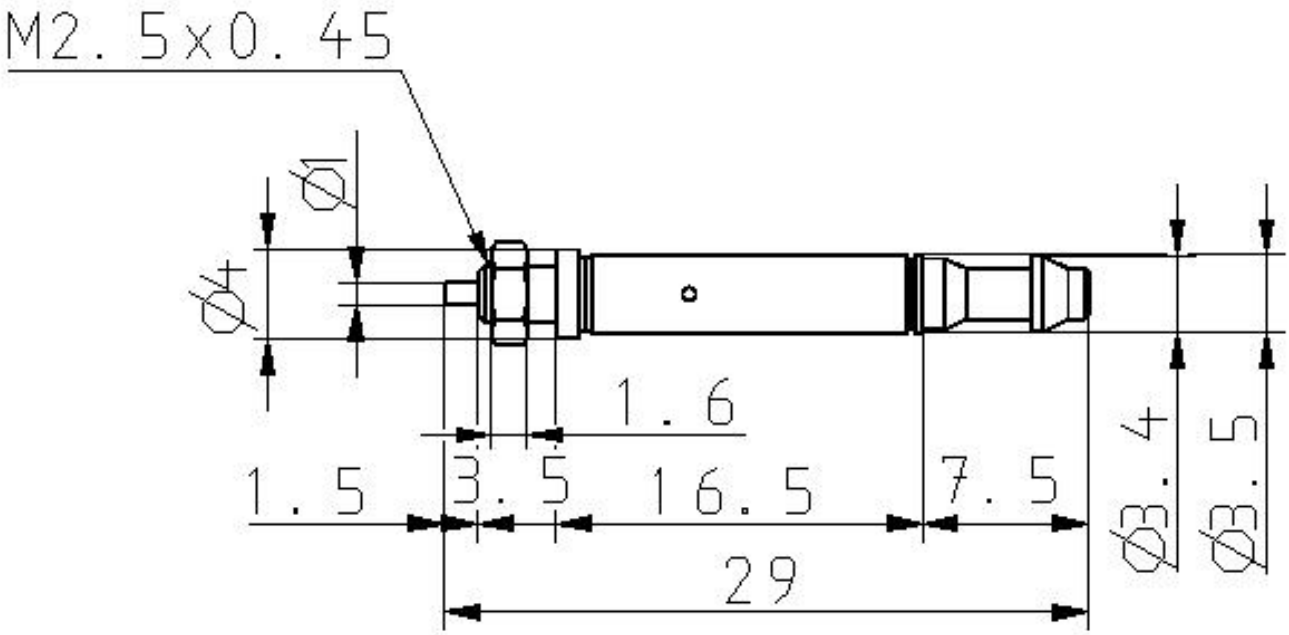


Specifications are subject to change without prior notice and any obligation on the part of the manufacturer.



SMC United Kingdom +34 945184126 sales@smc.uk

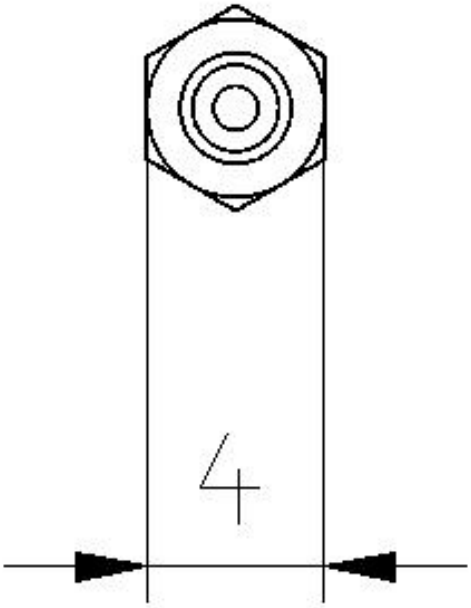


Specifications are subject to change without prior notice and any obligation on the part of the manufacturer.



SMC United Kingdom +34 945184126 sales@smc.uk

# Constructions

**CJ1B2-□SU4**

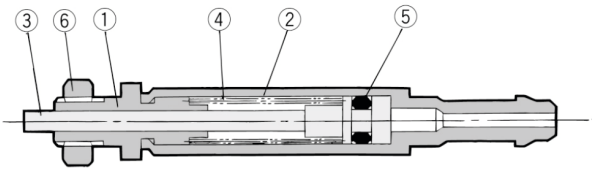


**CJ1B4-□SU4**

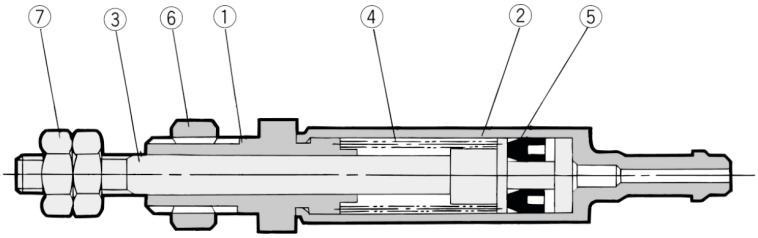


**Component Parts** (Impossible to disassemble)

| No. | Description | Material | Note |
|---|---|---|---|
| ① | Rod cover | Brass | Electroless nickel plated |
| ② | Cylinder tube | Brass | Electroless nickel plated |
| ③ | Piston rod | Stainless steel | |
| ④ | Spring | Stainless steel wire | |
| ⑤ | Piston seal | NBR | |
| ⑥ | Mounting nut | Brass | Black zinc chromate |
| ⑦ | Rod end nut | Steel | Electroless nickel plated |

Specifications are subject to change without prior notice and any obligation on the part of the manufacturer.



SMC United Kingdom +34 945184126 sales@smc.uk

## Additional information

| | |
|---|---|
| Catalogue | CJ1_EU.pdf |

Specifications are subject to change without prior notice and any obligation on the part of the manufacturer.



SMC United Kingdom +34 945184126 sales@smc.uk