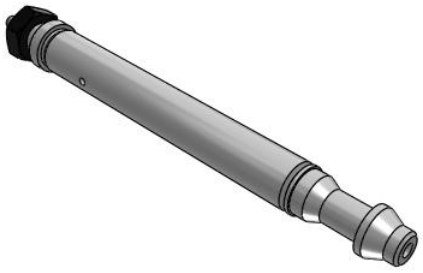

CJ1, Single Acting, Spring Return
CJ1B2-10SU4

Datasheet

General series information

- Air cylinder
- Single acting, spring return
- Bore size: 2.5mm, 4mm
- Mounting: basic
- Non switch capable

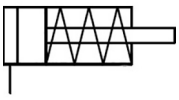

Single-acting cylinder, single piston rod, return stroke by spring

Standard specifications

Mounting	B (Basic Style)
Bore Size	2.5 mm
Stroke	10 mm
Applicable Tubing	U4 (Polyurethane:OD4, ID2.5 Soft Nylon:OD4, ID2.5)
Maximum operating pressure	0.7 MPa
Minimum operating pressure	0.3 MPa
Proof pressure	1.05 MPa
Type of cushioning	None
Lubrication	Not required (non-lube)
Ambient and fluid temperature	-10 to 70°C
Stroke length tolerance	+0.5
Thread Tolerance	JIS class 2
Piston speed	50 to 500 mm/s
Weight	0.002 Kg

Specifications are subject to change without prior notice and any obligation on the part of the manufacturer.

SMC United Kingdom +34 945184126 sales@smc.uk

Dimensions

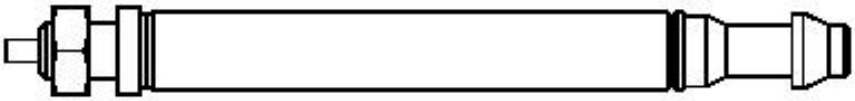

Specifications are subject to change without prior notice and any obligation on the part of the manufacturer.

SMC United Kingdom +34 945184126 sales@smc.uk

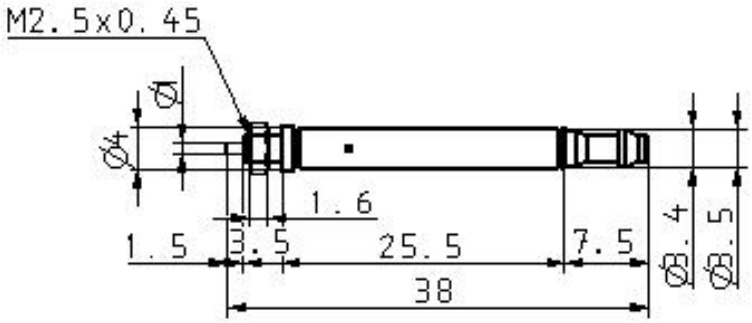

Specifications are subject to change without prior notice and any obligation on the part of the manufacturer.

SMC United Kingdom +34 945184126 sales@smc.uk

Constructions

CJ1B2-□SU4

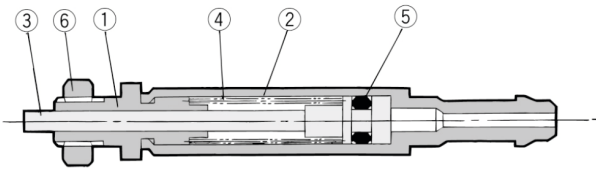

CJ1B4-□SU4

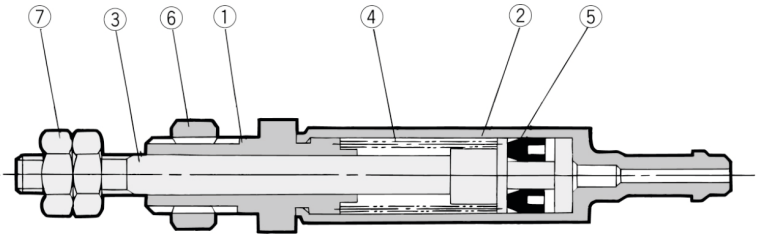

Component Parts (Impossible to disassemble)

No.	Description	Material	Note
①	Rod cover	Brass	Electroless nickel plated
②	Cylinder tube	Brass	Electroless nickel plated
③	Piston rod	Stainless steel	
④	Spring	Stainless steel wire	
⑤	Piston seal	NBR	
⑥	Mounting nut	Brass	Black zinc chromate
⑦	Rod end nut	Steel	Electroless nickel plated

Specifications are subject to change without prior notice and any obligation on the part of the manufacturer.

SMC United Kingdom +34 945184126 sales@smc.uk

Additional information

Catalogue	CJ1_EU.pdf

Specifications are subject to change without prior notice and any obligation on the part of the manufacturer.

SMC United Kingdom +34 945184126 sales@smc.uk