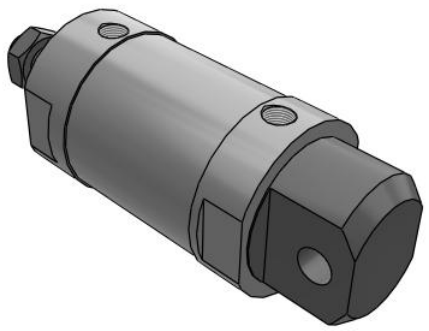

C(D)G5-S, Stainless Steel Cylinder, Double Acting, Single Rod

CG5EN100TFSR-50

Datasheet

General series information

- Double acting, single rod CG5-S cylinder
- All stainless steel external parts
- Special scraper prevents water from entering cylinder
- Bore sizes (mm): 20, 25, 32, 40, 50, 63, 80 and 100
- Auto switch capability

Double-acting, single-rod cylinder

Standard specifications

Magnet	None
Mounting	E (Integral Clevis)
Style	N (Non-lube Rubber Cushion)
Bore Size	100 mm
Thread	TF (G Ports)
Seal Material	R (NBR)
Stroke	50
Auto Switch	None
Lead Wire or Prewired Connector	0.5m (Or None in the Case of No Switch)
Number	2 pcs. (Or None in the Case of No Switch)
Rod End Options	None
Temperature Resistance	None
Pressure medium	Air
Maximum temperature of pressure medium	70 ºC
Minimum temperature of pressure medium	-10 ºC
Maximum operating pressure	1.0 MPa
Minimum operating pressure	0.05 MPa
Proof pressure	1.5 MPa

Specifications are subject to change without prior notice and any obligation on the part of the manufacturer.

SMC CORPORATION Zuazobidea 14, 01012, Vitoria-Gasteiz, Álava +34 945184100 +34 945184126 www.smc.eu support.marketingeurope@smc.com

Maximum ambient temperature	70 ºC
Minimum ambient temperature	-10 ºC
Number of pneumatic connections	2 pcs.
Pneumatic input connection	G 1/2
Mode of operation of drive	Double acting
Maximum piston speed	700 mm/s
Piston rod end	External thread
Geometric form of the piston rod	Round piston rod
Male thread of rod end	M26 x 1.5
Minimum piston speed	50 mm/s

Specifications are subject to change without prior notice and any obligation on the part of the manufacturer.

SMC CORPORATION Zuazobidea 14, 01012, Vitoria-Gasteiz, Álava +34 945184100 +34 945184126 www.smc.eu support.marketingeurope@smc.com

Dimensions

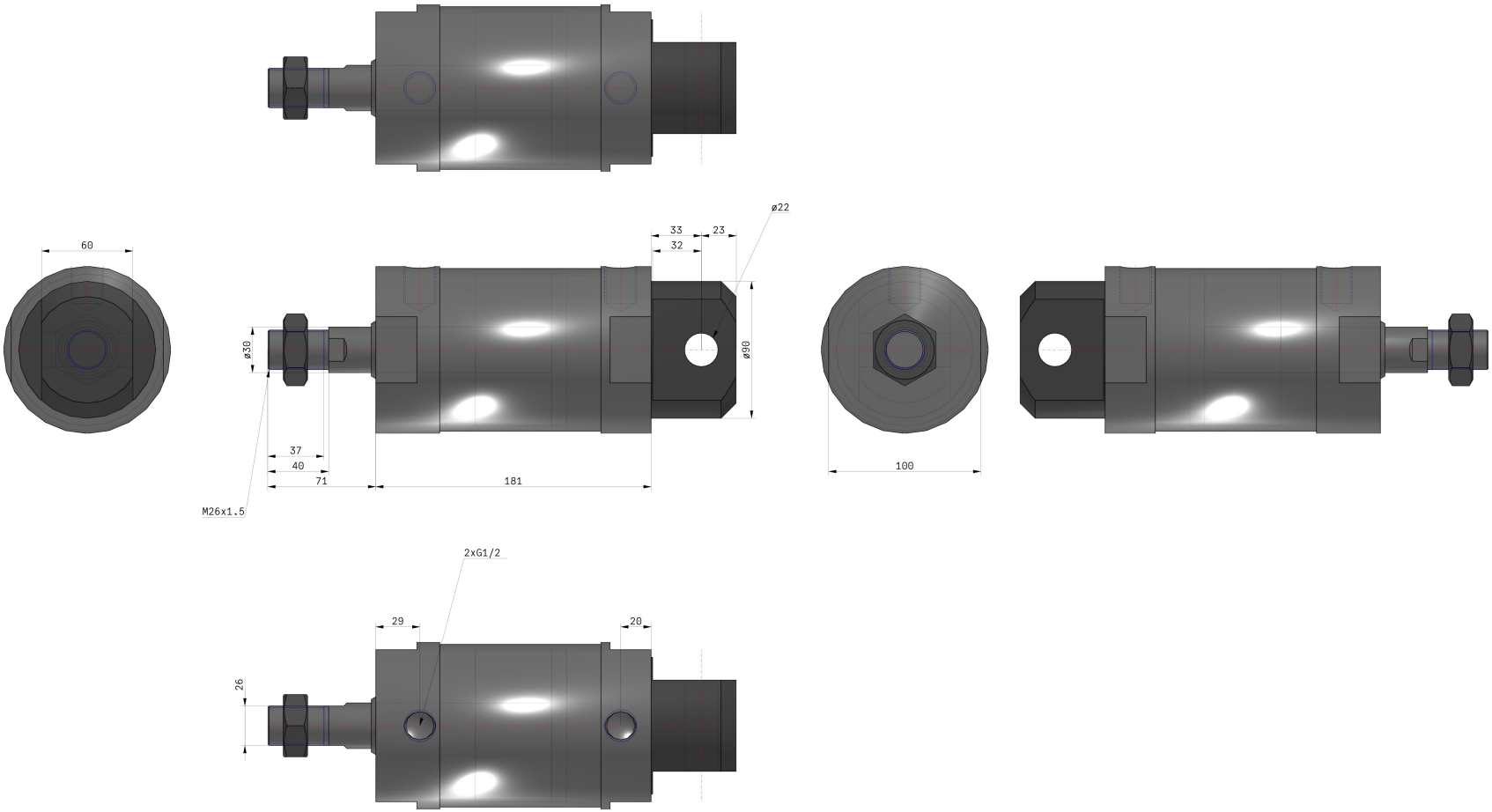

Specifications are subject to change without prior notice and any obligation on the part of the manufacturer.

SMC CORPORATION Zuazobidea 14, 01012, Vitoria-Gasteiz, Álava +34 945184100 +34 945184126 www.smc.eu support.marketingeurope@smc.com

Constructions

Construction

With rubber bumper

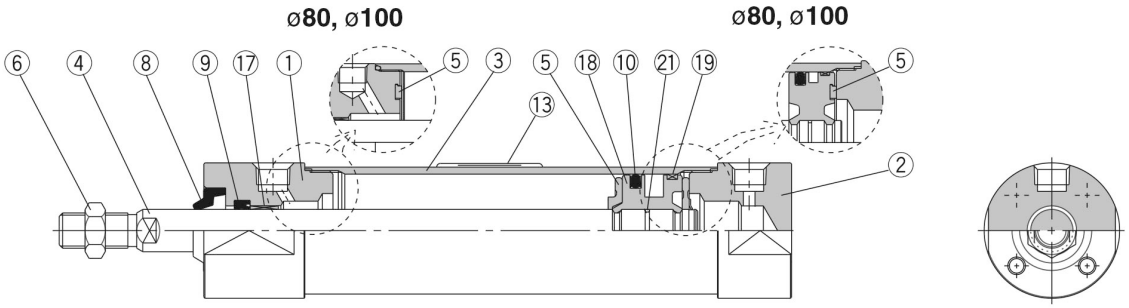

Component Parts

No.	Description	Material	
1	**Rod cover**	Stainless steel 304	
2	**Head cover**	Stainless steel 304	
3	**Cylinder tube**	Stainless steel 304	
4	**Piston rod**	Stainless steel 304	Hard chrome plated
5	**Bumper**	Urethane	
6	**Rod end nut**	Stainless steel 304	
17	**Bushing**	Bearing alloy	
18	**Piston**	Aluminium alloy	
19	**Wearing**	Resin	

Note 1) Component part material and surface treatment other than listed above are the same as the standard type of Series CG1.
Note 2) For cylinders with an auto switch, the piston is fixed with a magnet.

No.	Description	Material	
		CG5□□□SR	**CG5□□□SV**
8	**Water resistant scraper**	NBR	FKM
9	**Rod seal**		
10	**Piston seal**		
21	**Piston gasket**		
13	**Label protector**	PET	

Specifications are subject to change without prior notice and any obligation on the part of the manufacturer.

SMC CORPORATION Zuazobidea 14, 01012, Vitoria-Gasteiz, Álava +34 945184100 +34 945184126 www.smc.eu support.marketingeurope@smc.com

Additional information

Catalogue CJ5-CG5-B_EU.pdf

Specifications are subject to change without prior notice and any obligation on the part of the manufacturer.

SMC CORPORATION Zuazobidea 14, 01012, Vitoria-Gasteiz, Álava +34 945184100 +34 945184126 www.smc.eu support.marketingeurope@smc.com