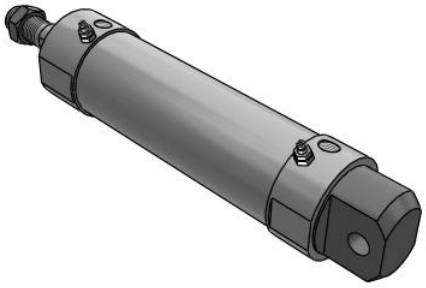

# C(D)G5-S, Stainless Steel Cylinder, Double Acting, Single Rod

## CG5EA40TFSR-75

Datasheet

## General series information

- Double acting, single rod CG5-S cylinder
- All stainless steel external parts
- Special scraper prevents water from entering cylinder
- Bore sizes (mm): 20, 25, 32, 40, 50, 63, 80 and 100
- Auto switch capability

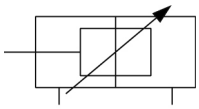

*Double-acting cylinder with cushioning adjustable at both ends, single piston rod*

## Standard specifications

| | |
|---|---|
| Magnet | None |
| Mounting | E (Integral Clevis) |
| Style | A (Non-lube Air Cushion) |
| Bore Size | 40 mm |
| Thread | TF (G Ports) |
| Seal Material | R (NBR) |
| Stroke | 75 |
| Auto Switch | None |
| Lead Wire or Prewired Connector | 0.5m (Or None in the Case of No Switch) |
| Number | 2 pcs. (Or None in the Case of No Switch) |
| Rod End Options | None |
| Temperature Resistance | None |
| Pressure medium | Air |
| Maximum temperature of pressure medium | 70 ºC |
| Minimum temperature of pressure medium | -10 ºC |
| Maximum operating pressure | 1.0 MPa |
| Minimum operating pressure | 0.05 MPa |
| Proof pressure | 1.5 MPa |

*Specifications are subject to change without prior notice and any obligation on the part of the manufacturer.*



**SMC CORPORATION** Zuazobidea 14, 01012, Vitoria-Gasteiz, Álava +34 945184100 +34 945184126 www.smc.eu support.marketingeurope@smc.com

| | |
|---|---|
| Maximum ambient temperature | 70 ºC |
| Minimum ambient temperature | -10 ºC |
| Number of pneumatic connections | 2 pcs. |
| Pneumatic input connection | G 1/8 |
| Mode of operation of drive | Double acting |
| Maximum piston speed | 1000 mm/s |
| Piston rod end | External thread |
| Geometric form of the piston rod | Round piston rod |
| Male thread of rod end | M14 x 1.5 |
| Minimum piston speed | 50 mm/s |
| Weight | 1.410 Kg |

Specifications are subject to change without prior notice and any obligation on the part of the manufacturer.



SMC CORPORATION Zuazobidea 14, 01012, Vitoria-Gasteiz, Álava +34 945184100 +34 945184126 www.smc.eu support.marketingeurope@smc.com

# Dimensions

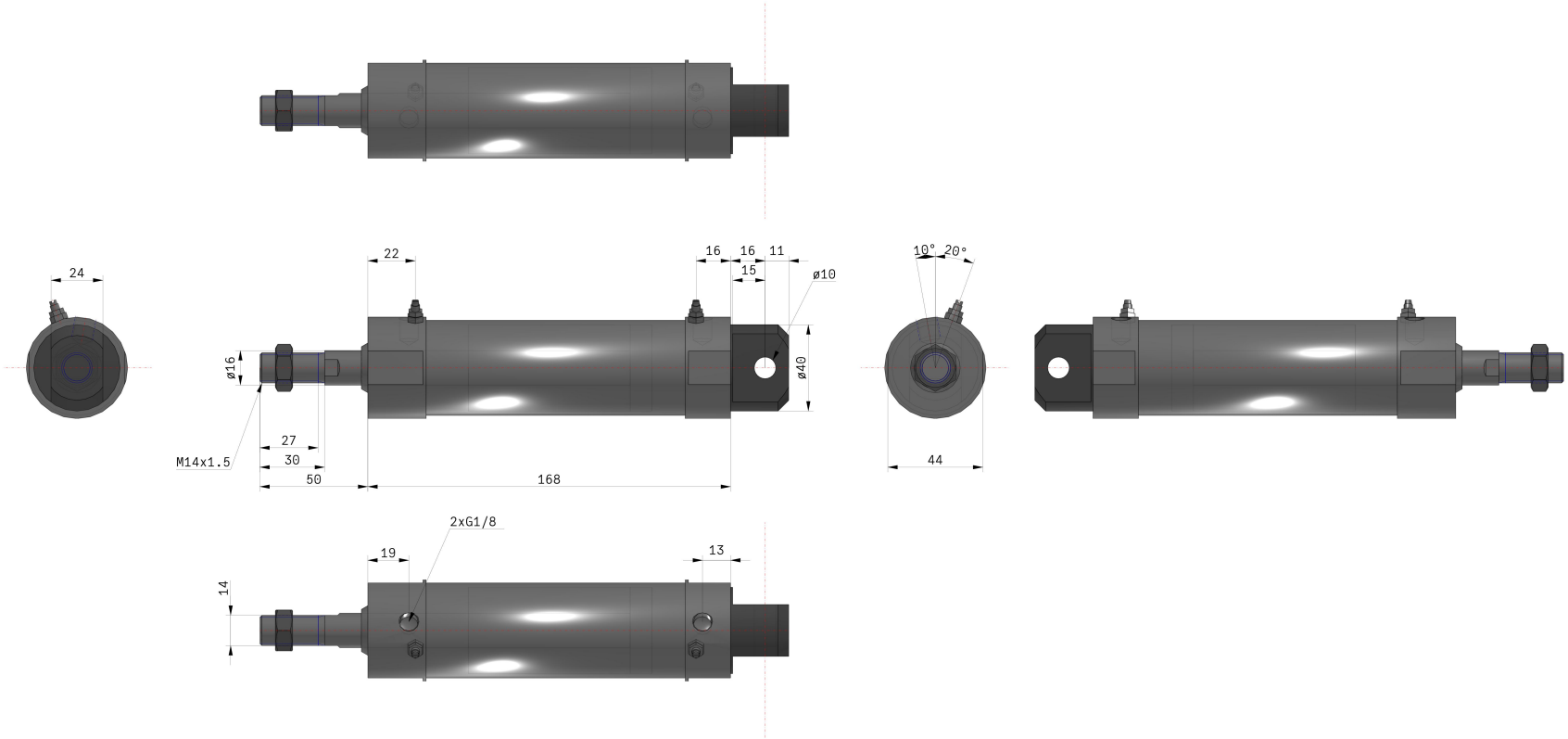


Specifications are subject to change without prior notice and any obligation on the part of the manufacturer.



SMC CORPORATION Zuazobidea 14, 01012, Vitoria-Gasteiz, Álava +34 945184100 +34 945184126 www.smc.eu support.marketingeurope@smc.com

# Constructions

## Construction

### With air cushion

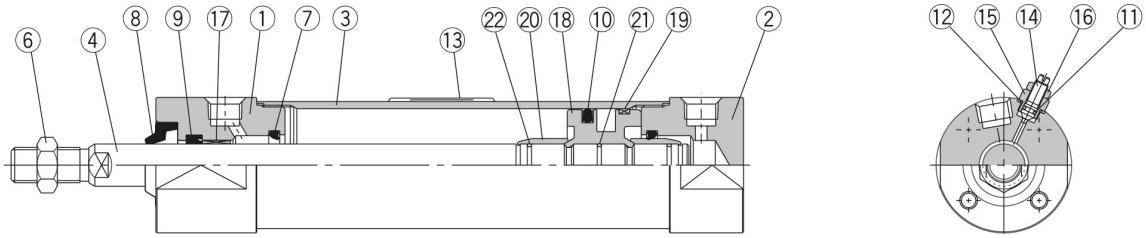


## Component Parts

| No. | Description | Material | |
|---|---|---|---|
| 1 | **Rod cover** | Stainless steel 304 | |
| 2 | **Head cover** | Stainless steel 304 | |
| 3 | **Cylinder tube** | Stainless steel 304 | |
| 4 | **Piston rod** | Stainless steel 304 | Hard chrome plated |
| 6 | **Rod end nut** | Stainless steel 304 | |
| 7 | **Cushion seal** | Urethane | |
| 14 | **Cushion valve** | Stainless steel 304 | |
| 15 | **Valve retainer** | Stainless steel 304 | |
| 16 | **Lock nut** | Stainless steel 304 | |
| 17 | **Bushing** | Bearing alloy | |
| 18 | **Piston** | Aluminium alloy | |
| 19 | **Wearing** | Resin | |
| 20 | **Cushion ring** | Aluminium alloy | |

Note 1) Component part material and surface treatment other than listed above are the same as the standard type of Series CG1.
Note 2) For cylinders with an auto switch, the piston is fixed with a magnet.

| No. | Description | Material | |
|---|---|---|---|
| | | **CG5□□□SR** | **CG5□□□SV** |
| 8 | **Water resistant scraper** | NBR | FKM |
| 9 | **Rod seal** | | |
| 10 | **Piston seal** | | |
| 11 | **Valve seal** | | |
| 12 | **Valve retainer gasket** | | |
| 21 | **Piston gasket** | | |
| 22 | **Cushion ring gasket** | | |
| 13 | **Label protector** | PET | |

*Specifications are subject to change without prior notice and any obligation on the part of the manufacturer.*



**SMC CORPORATION** Zuazobidea 14, 01012, Vitoria-Gasteiz, Álava +34 945184100 +34 945184126 www.smc.eu support.marketingeurope@smc.com

## Additional information

Catalogue CJ5-CG5-B_EU.pdf

Specifications are subject to change without prior notice and any obligation on the part of the manufacturer.



SMC CORPORATION Zuazobidea 14, 01012, Vitoria-Gasteiz, Álava +34 945184100 +34 945184126 www.smc.eu support.marketingeurope@smc.com