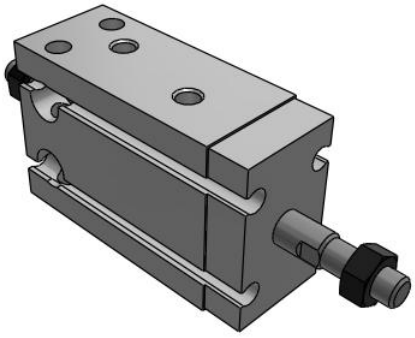

C(D)UW, Free Mount Cylinder, Double Rod

CDUW16-5D

Datasheet

General series information

- Free mount cylinder, double rod type
- Bore sizes from 6mm to 32mm available
- Stroke lengths up to 50mm
- Space saving
- Auto-switch capable

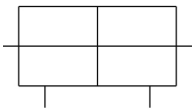

Double-acting cylinder with double piston rod

Standard specifications

Magnet	D (Built-in Magnet)
Bore Size	16 mm
Port Thread	M5x0.8; Rc1/8 for ø32
Stroke	5 mm
Auto Switch	No Switch
Lead Wire or Prewired Connector	0.5 m (Or None in the Case of No Switch)
Number	2 pcs. (Or None in the Case of No Switch)
Maximum operating pressure	0.7 MPa
Minimum operating pressure	0.10 MPa
Proof pressure	1.05 MPa
Theoretical cylinder force, advance stroke (at 0.5 MPa)	86 N
Type of cushioning	Rubber Bumper
Piston rod end	Male Thread
Lubrication	Non-lube
Fluid	Air
Ambient and fluid temperature	-10 - 60 °C
Stroke length tolerance	0+1.0 mm
Thread Tolerance	JIS Class2

Specifications are subject to change without prior notice and any obligation on the part of the manufacturer.

SMC CORPORATION Zuazobidea 14, 01012, Vitoria-Gasteiz, Álava +34 945184100 +34 945184126 www.smc.eu support.marketingeurope@smc.com

Piston speed	50 - 500 mm/s
Weight	0.090 Kg

Specifications are subject to change without prior notice and any obligation on the part of the manufacturer.

SMC CORPORATION Zuazobidea 14, 01012, Vitoria-Gasteiz, Álava +34 945184100 +34 945184126 www.smc.eu support.marketingeurope@smc.com

Dimensions

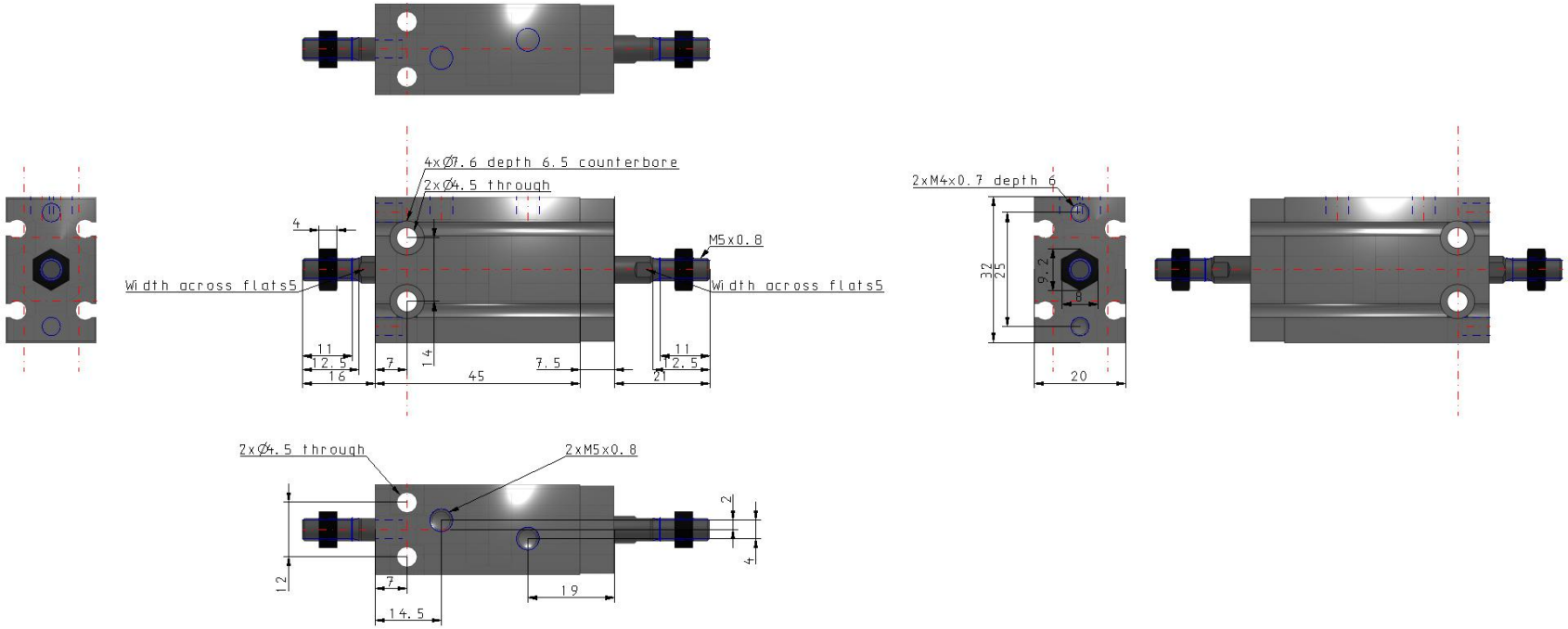

Specifications are subject to change without prior notice and any obligation on the part of the manufacturer.

SMC CORPORATION Zuazobidea 14, 01012, Vitoria-Gasteiz, Álava +34 945184100 +34 945184126 www.smc.eu support.marketingeurope@smc.com

Constructions

ø16 to 32 With auto switch

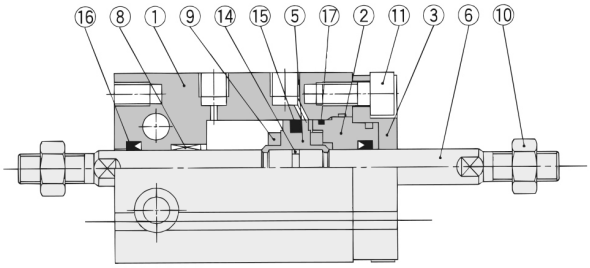

Component Parts

No.	Description	Material	Note
1	Cylinder tube	Aluminum alloy	Hard anodized
2	Rod cover	Aluminum bearing alloy	Chromated
3	Rod cover retainer	Aluminum alloy	Hard anodized
4	Piston	Brass	ø6
5	Piston	Brass	ø6, ø10
		Aluminum alloy	ø16 to ø32, Chromated
6	Piston rod	Stainless steel	
7	Piston rod	Stainless steel	ø6
8	Bushing	Oil-impregnated sintered alloy	

Component Parts

No.	Description	Material	Note
9	Bumper	Urethane	
10	Rod end nut	Carbon steel	Nickel plated
11	Hexagon socket head cap screw	Carbon steel	Nickel plated
12	Magnet	Magnetic material	
13	Auto switch	——	
14	Piston gasket	NBR	
15*	Piston seal		
16*	Rod seal		
17*	Gasket		

Specifications are subject to change without prior notice and any obligation on the part of the manufacturer.

SMC CORPORATION Zuazobidea 14, 01012, Vitoria-Gasteiz, Álava +34 945184100 +34 945184126 www.smc.eu support.marketingeurope@smc.com

Additional information

Catalogue	CU_B_EU.pdf
Operation manuals	OM_CU_OM0002EN-A.pdf

Specifications are subject to change without prior notice and any obligation on the part of the manufacturer.

SMC CORPORATION Zuazobidea 14, 01012, Vitoria-Gasteiz, Álava +34 945184100 +34 945184126 www.smc.eu support.marketingeurope@smc.com