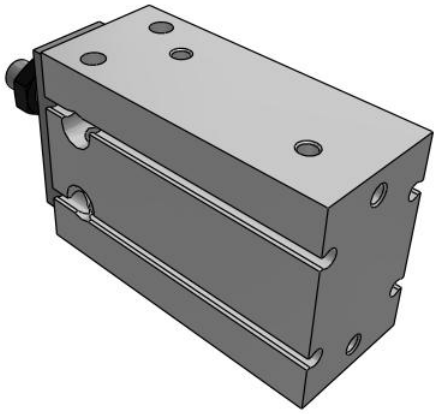

C(D)UK, Free Mount Cylinder, Non-rotating, Double Acting

CDUK25-25D

Datasheet

General series information

- Bore sizes from 6mm to 32mm available
- Stroke lengths up to 50mm
- Non-rotating Rod
- Double acting
- Auto-switch capable

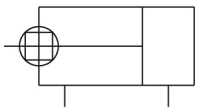

Double-acting cylinder, non-rotating single piston rod

Standard specifications

Bore Size	25 mm
Stroke	25 mm
Lead Wire or Prewired Connector	0.5m (Or None in the Case of No Switch)
Number	2 pcs. (Or None in the Case of No Switch)
Magnet	D (Built-in Magnet)
Port Thread	Bore 6~25:M5, Bore 32: Rc 1/8
Auto Switch	No Switch
Maximum operating pressure	0.7 MPa
Minimum operating pressure	0.08 MPa
Proof pressure	1.05 MPa
Type of cushioning	Rubber Bumper
Piston rod end	Male Thread
Lubrication	Non-lube
Fluid	Air
Rod non-rotating accuracy	±0.5
Ambient and fluid temperature	-10 - 60 °C
Stroke length tolerance	0+1.0 mm
Thread Tolerance	JIS Class2

Specifications are subject to change without prior notice and any obligation on the part of the manufacturer.

SMC United Kingdom +34 945184126 sales@smc.uk

Piston speed	50 - 500 mm/s
Weight	0.280 Kg

Specifications are subject to change without prior notice and any obligation on the part of the manufacturer.

SMC United Kingdom +34 945184126 sales@smc.uk

Dimensions

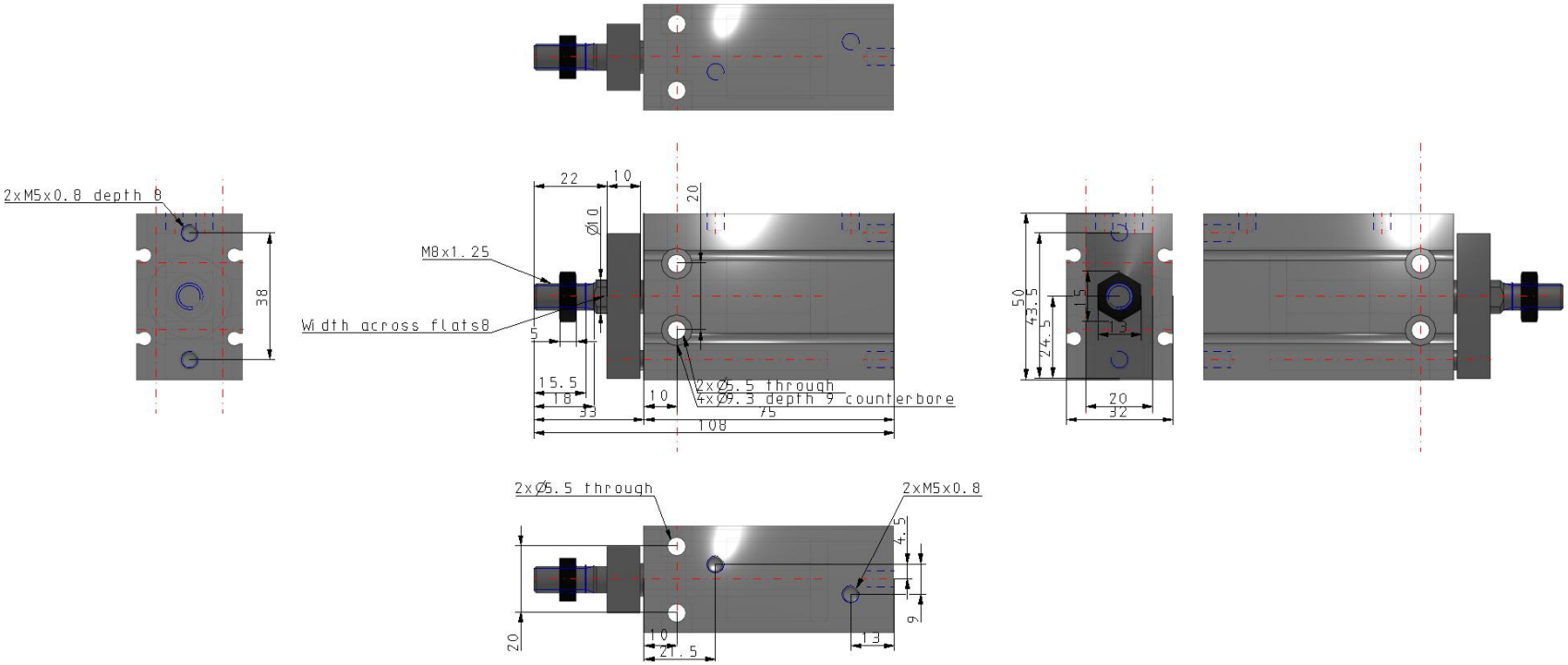

Specifications are subject to change without prior notice and any obligation on the part of the manufacturer.

SMC United Kingdom +34 945184126 sales@smc.uk

Constructions

ø16 to ø32 With auto switch

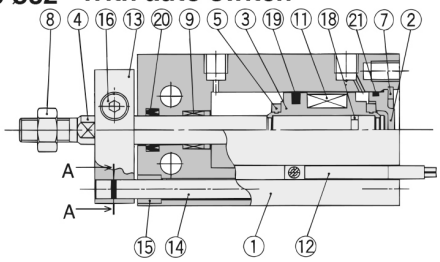

Component Parts

No.	Description	Material	Note
1	Cylinder tube	Aluminum alloy	Hard anodized
2	Head cover	Brass	ø6 to ø10, Electroless nickel plated
		Aluminum alloy	ø16 to ø32, Clear chromated
3	Piston	Brass	ø6 to ø10,
		Aluminum alloy	ø16 to ø32, Chromated
4	Piston rod	Stainless steel	
5	Bumper A	Urethane	
6	Bumper B	Urethane	
7	Snap ring	Carbon tool steel	Phosphate coated
8	Rod end nut	Carbon steel	Nickel plated
9	Bushing	Oil-impregnated sintered alloy	
10	Magnet holder	Brass	ø6

Component Parts

No.	Description	Material	Note
11	Magnet	Magnetic material	
12	Auto switch	————	
13	Non-rotating plate	Aluminum alloy	Nickel plated
14	Guide rod	Stainless steel	
15	Bushing	Oil-impregnated sintered alloy	
16	Hexagon socket head cap screw	Carbon steel	Black zinc chromated
17	Hexagon socket head set screw	Carbon steel	Black zinc chromated
18	Piston gasket	NBR	
19*	Piston seal		
20*	Rod seal		
21*	Gasket		

Specifications are subject to change without prior notice and any obligation on the part of the manufacturer.

SMC United Kingdom +34 945184126 sales@smc.uk

Additional information

Catalogue	CU_B_EU.pdf
Operation manuals	OM_CU_OM0002EN-A.pdf

Specifications are subject to change without prior notice and any obligation on the part of the manufacturer.

SMC United Kingdom +34 945184126 sales@smc.uk