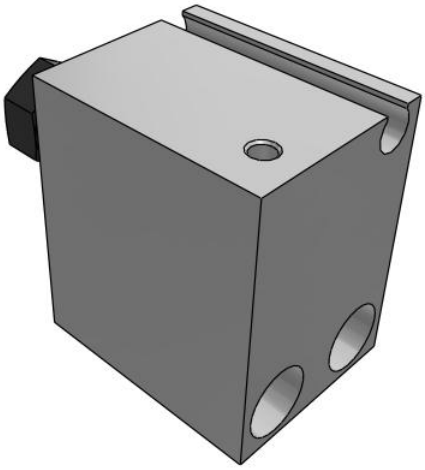

# C(D)UJ, Miniature Free Mount Cylinder

## CDUJS16-5SM

Datasheet

## General series information

- Miniature free mount
- Space saving compact cylinder
- Available in 4mm to 20mm bore size.

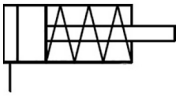

*Single-acting cylinder, single piston rod, return stroke by spring*

## Standard specifications

| | |
|---|---|
| Clean Series | Without Clean Series |
| Magnet | D (Built-in Magnet) |
| Mounting Direction | S (Axial Mounting) |
| Bore Size | 16 |
| Stroke | 5mm |
| Action | S (Single Acting Spring Return) |
| Rod End Thread | M (Rod End Male Thread) |
| Auto Switch | No Switch |
| Lead Wire or Prewired Connector | 0.5m (Or None in the Case of No Switch) |
| Number | 2 pcs. (Or None in the Case of No Switch) |
| Pressure medium | Air |
| Maximum operating pressure | 0.7 MPa |
| Minimum operating pressure | 0.25 MPa |
| Proof pressure | 1.05 MPa |
| Theoretical cylinder force, advance stroke (at 0.5 MPa) | 101 N |
| Theoretical cylinder force, return stroke (at 0.5 MPa) | 75 N |
| Type of cushioning | Rubber Bumper |
| Malethread of rod end | Male Thread |
| Ambient and fluid temperature | -10 to 70 °C |
| Stroke length tolerance | 0 - +1.0 |

Specifications are subject to change without prior notice and any obligation on the part of the manufacturer.



SMC CORPORATION Zuazobidea 14, 01012, Vitoria-Gasteiz, Álava +34 945184100 +34 945184126 www.smc.eu support.marketingeurope@smc.com

| | |
|---|---|
| F449 - Rod_end_thread_tolerance | JIS class 2 |
| F450 - Mounting | Through-hole |
| Piston speed | 50 - 500 mm/s |
| Weight | 0.045 Kg |

Specifications are subject to change without prior notice and any obligation on the part of the manufacturer.



SMC CORPORATION Zuazobidea 14, 01012, Vitoria-Gasteiz, Álava +34 945184100 +34 945184126 www.smc.eu support.marketingeurope@smc.com

# Dimensions

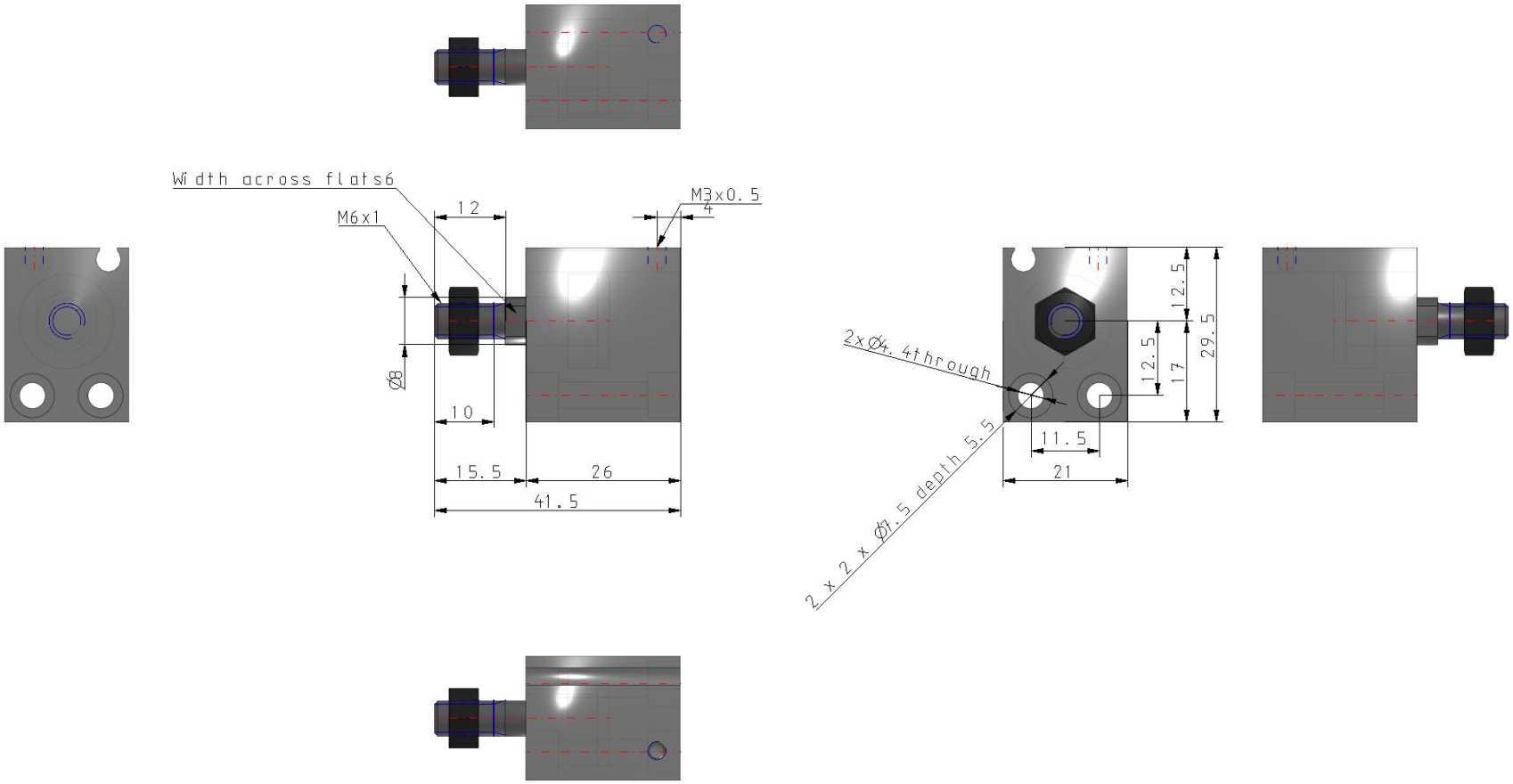


Specifications are subject to change without prior notice and any obligation on the part of the manufacturer.



SMC CORPORATION Zuazobidea 14, 01012, Vitoria-Gasteiz, Álava +34 945184100 +34 945184126 www.smc.eu support.marketingeurope@smc.com

## Additional information

| | |
|---|---|
| Catalogue | CUJ-C_EU.pdf |
| Operation manuals | cuj_cuj_-om0001j.pdf |

Specifications are subject to change without prior notice and any obligation on the part of the manufacturer.



SMC CORPORATION Zuazobidea 14, 01012, Vitoria-Gasteiz, Álava +34 945184100 +34 945184126 www.smc.eu support.marketingeurope@smc.com