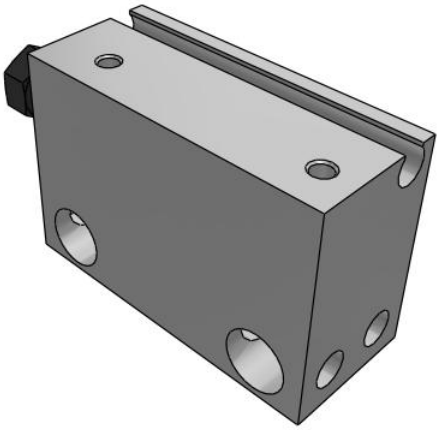

C(D)UJ, Miniature Free Mount Cylinder

CDUJB12-20DM

Datasheet

General series information

- Miniature free mount
- Space saving compact cylinder
- Available in 4mm to 20mm bore size.

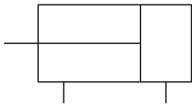

Double-acting, single-rod cylinder

Standard specifications

Bore Size	12
Stroke	20 mm
Action	D (Double Acting)
Rod End Thread	M (Rod End Male Thread)
Lead Wire or Prewired Connector	0.5m (Or None in the Case of No Switch)
Number	2 pcs. (Or None in the Case of No Switch)
Magnet	D (Built-in Magnet)
Mounting Direction	B (Lateral Mounting)
Auto Switch	No Switch
Clean Series	Without Clean Series
Pressure medium	Air
Maximum operating pressure	0.7 MPa
Minimum operating pressure	0.07 MPa
Proof pressure	1.05 MPa
Theoretical cylinder force, advance stroke (at 0.5 MPa)	57 N
Theoretical cylinder force, return stroke (at 0.5 MPa)	42 N
Type of cushioning	Rubber bumper
Malethread of rod end	Male Thread
Ambient and fluid temperature	-10 to 70 °C
Stroke length tolerance	0 - +1.0

Specifications are subject to change without prior notice and any obligation on the part of the manufacturer.

SMC United Kingdom +34 945184126 sales@smc.uk

F449 - Rod_end_thread_tolerance	JIS class 2
F450 - Mounting	Through-hole
Piston speed	50 - 500 mm/s
Weight	0.045 Kg

Specifications are subject to change without prior notice and any obligation on the part of the manufacturer.

SMC United Kingdom +34 945184126 sales@smc.uk

Dimensions

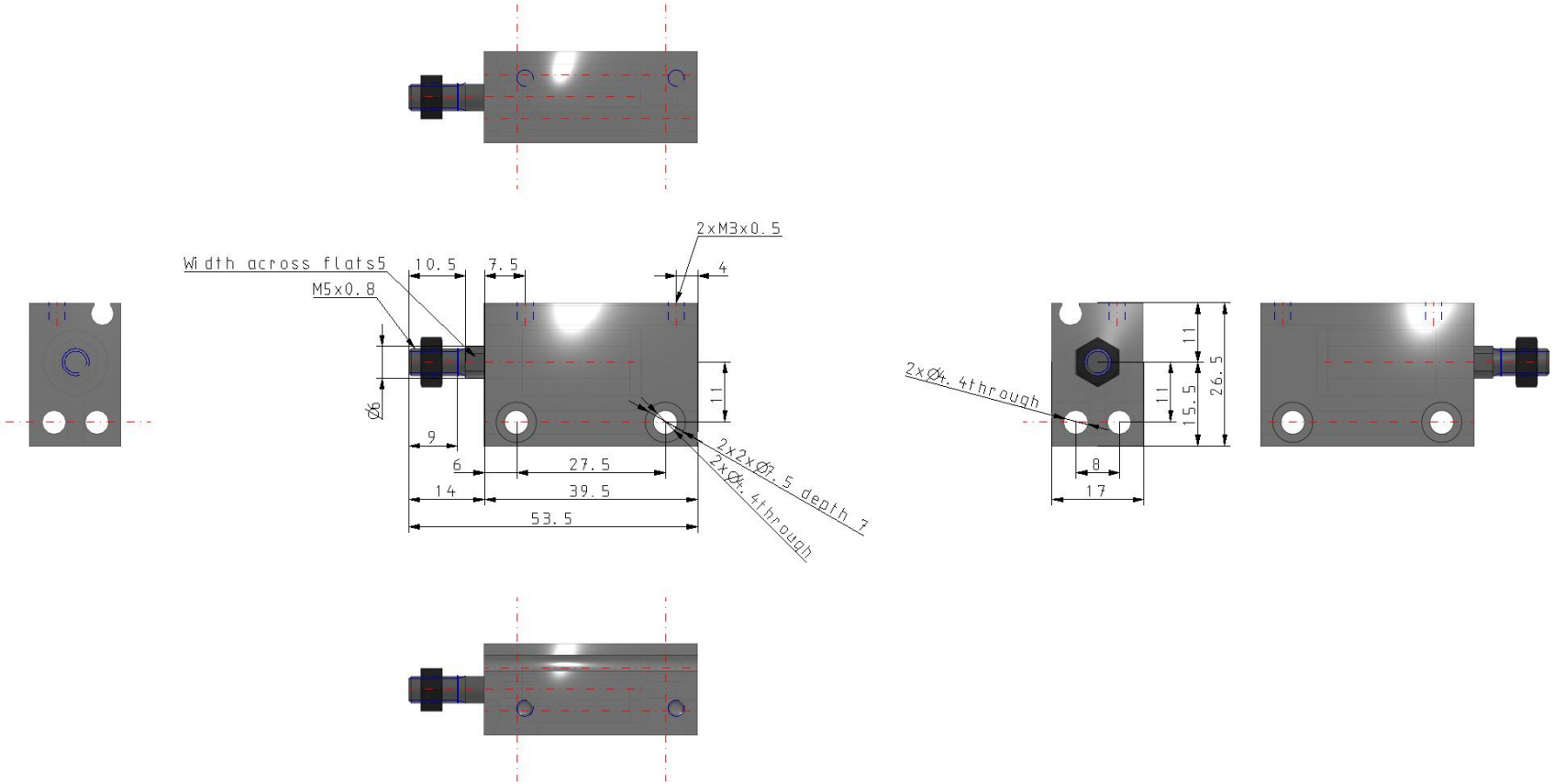

Specifications are subject to change without prior notice and any obligation on the part of the manufacturer.

Constructions

Double Acting

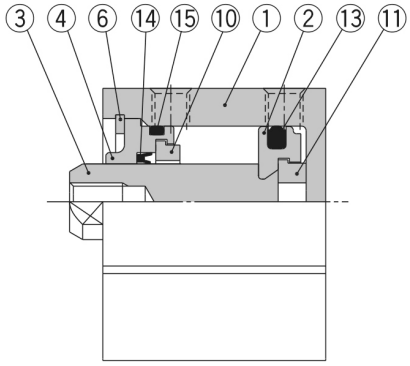

Without magnet

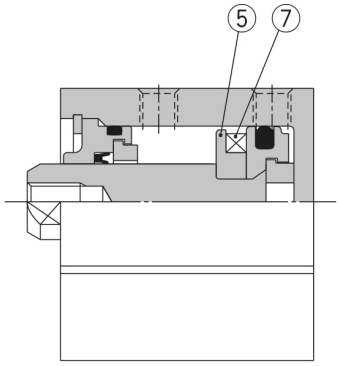

Built-in magnet

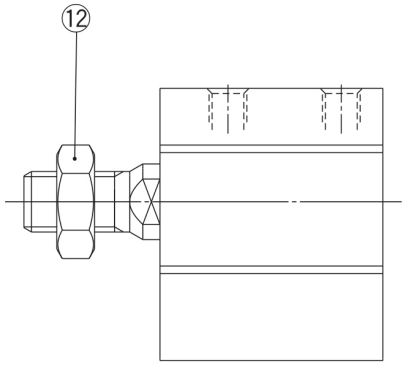

Rod end male threaded

Component Parts

No.	Description	Material	Note
1	**Cylinder tube**	Aluminum alloy	Hard anodized
2	**Piston**	Aluminum alloy	Trivalent chromated
3	**Piston rod**	Stainless steel	
4	**Collar**	Aluminum alloy	Hard anodized
5	**Magnet holder**	Aluminum alloy	Trivalent chromated
6	**Retaining ring**	Steel for special applications	Phosphate coated
7	**Magnet**	—	
8	**Return spring**	Steel wire	Zinc trivalent chromated
9	**Element**	Bronze casted	(for Ø 12, Ø 16)
	Plug with fixed restrictor	Structural steel	Nickel plated (for Ø 20)
10	**Damper A**	Resin	
11	**Damper B**	Resin	
12	**Rod end nut**	Steel wire	Nickel plated
13	**Piston seal**	NBR	
14	**Rod seal**	NBR	
15	**O-ring**	NBR	

Specifications are subject to change without prior notice and any obligation on the part of the manufacturer.

SMC United Kingdom +34 945184126 sales@smc.uk

Additional information

Catalogue	CUJ-C_EU.pdf
Operation manuals	cuj_cuj_-om0001j.pdf

Specifications are subject to change without prior notice and any obligation on the part of the manufacturer.

SMC United Kingdom +34 945184126 sales@smc.uk