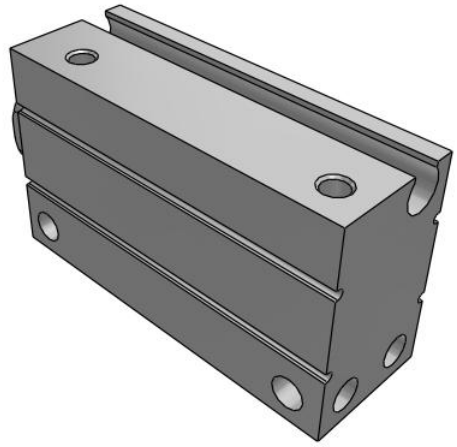

# C(D)UJ, Miniature Free Mount Cylinder

## CDUJB10-20D

Datasheet

## General series information

- Miniature free mount
- Space saving compact cylinder
- Available in 4mm to 20mm bore size.

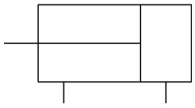

*Double-acting, single-rod cylinder*

## Standard specifications

| | |
|---|---|
| Bore Size | 10 |
| Stroke | 20 mm |
| Action | D (Double Acting) |
| Rod End Thread | Rod End Female Thread (w/o Thread for ø4) |
| Lead Wire or Prewired Connector | 0.5m (Or None in the Case of No Switch) |
| Number | 2 pcs. (Or None in the Case of No Switch) |
| Magnet | D (Built-in Magnet) |
| Mounting Direction | B (Lateral Mounting) |
| Auto Switch | No Switch |
| Clean Series | Without Clean Series |
| Pressure medium | Air |
| Maximum operating pressure | 0.7 MPa |
| Minimum operating pressure | 0.1 MPa |
| Proof pressure | 1.05 MPa |
| Theoretical cylinder force, advance stroke (at 0.5 MPa) | 39.26 N |
| Theoretical cylinder force, return stroke (at 0.5 MPa) | 25.13 N |
| Femalethread of rod end | Standard |
| Ambient and fluid temperature | -10 to 70 °C |
| Stroke length tolerance | 0 - +0.5 |
| F449 - Rod_end_thread_tolerance | JIS class 2 |

*Specifications are subject to change without prior notice and any obligation on the part of the manufacturer.*



SMC United Kingdom +34 945184126 sales@smc.uk

| | |
|---|---|
| F450 - Mounting | Through-hole |
| Piston speed | 50 - 500 mm/s |
| Weight | 0.032 Kg |

Specifications are subject to change without prior notice and any obligation on the part of the manufacturer.



SMC United Kingdom +34 945184126 sales@smc.uk

# Dimensions

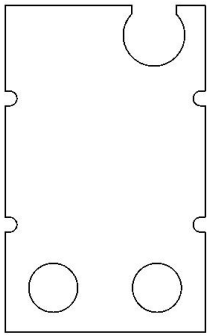

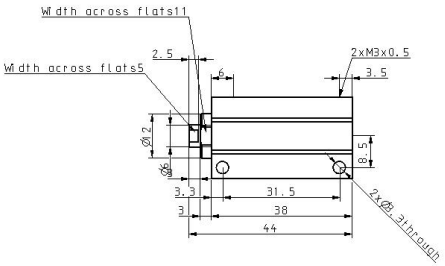


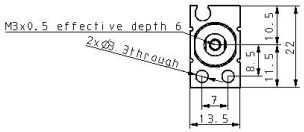


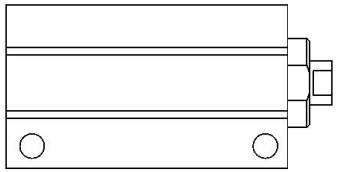

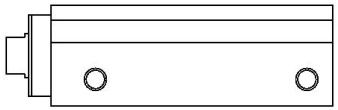

Specifications are subject to change without prior notice and any obligation on the part of the manufacturer.

# Constructions

## Double Acting

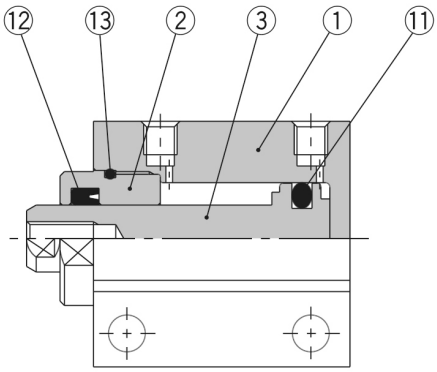


**Without magnet**

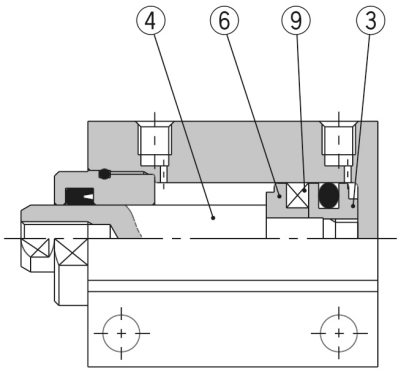


**Built-in magnet**

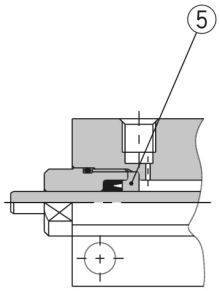


**Ø 4**

## Component Parts

| No. | Description | | Material | Note |
|---|---|---|---|---|
| 1 | **Cylinder tube** | | Aluminum alloy | Hard anodized |
| 2 | **Rod cover** | | Copper alloy | Electroless nickel plated |
| 3 | **Piston** | **Without switch** | Stainless steel | |
| | | **With switch** | Aluminum alloy | Chromated |
| 4 | **Piston rod** | | Stainless steel | |
| 5 | **Seal retainer** | | Aluminum alloy | Chromated (CUJB4 only) |
| 6 | **Magnet retainer** | | Aluminum alloy | Chromated |
| 7 | **Return spring** | | Piano wire | |
| 8 | **Bronze element** | | Sintered metallic BC | |
| 9 | **Magnet** | | — | |
| 10 | **Rod end nut** | | Iron | Nickel plated |
| 11 | **Piston seal** | | NBR | |
| 12 | **Rod seal** | | NBR | |
| 13 | **Tube gasket** | | NBR | |

*Specifications are subject to change without prior notice and any obligation on the part of the manufacturer.*



SMC United Kingdom +34 945184126 sales@smc.uk

## Additional information

| | |
|---|---|
| Catalogue | CUJ-C_EU.pdf |
| Operation manuals | cuj_cuj_-om0001j.pdf |

Specifications are subject to change without prior notice and any obligation on the part of the manufacturer.



SMC United Kingdom +34 945184126 sales@smc.uk