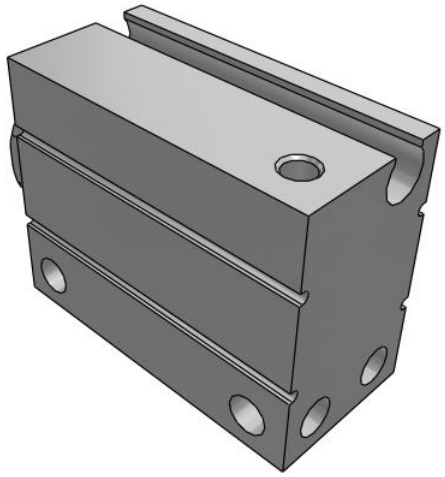

C(D)UJ, Miniature Free Mount Cylinder

CDUJB10-10S

Datasheet

General series information

- Miniature free mount
- Space saving compact cylinder
- Available in 4mm to 20mm bore size.

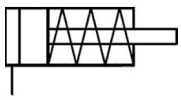

Single-acting cylinder, single piston rod, return stroke by spring

Standard specifications

Bore Size	10
Stroke	10 mm
Action	S (Single Acting Spring Return)
Rod End Thread	Rod End Female Thread (w/o Thread for ø4)
Lead Wire or Prewired Connector	0.5m (Or None in the Case of No Switch)
Number	2 pcs. (Or None in the Case of No Switch)
Magnet	D (Built-in Magnet)
Mounting Direction	B (Lateral Mounting)
Auto Switch	No Switch
Clean Series	Without Clean Series
Pressure medium	Air
Maximum operating pressure	0.7 MPa
Minimum operating pressure	0.2 MPa
Proof pressure	1.05 MPa
Theoretical cylinder force, advance stroke (at 0.5 MPa)	39.26 N
Theoretical cylinder force, return stroke (at 0.5 MPa)	25.13 N
Femalethread of rod end	Standard
Ambient and fluid temperature	-10 to 70 °C
Stroke length tolerance	0 - +0.5
F449 - Rod_end_thread_tolerance	JIS class 2

Specifications are subject to change without prior notice and any obligation on the part of the manufacturer.

SMC United Kingdom +34 945184126 sales@smc.uk

F450 - Mounting	Through-hole
Piston speed	50 - 500 mm/s

Specifications are subject to change without prior notice and any obligation on the part of the manufacturer.

SMC United Kingdom +34 945184126 sales@smc.uk

Dimensions

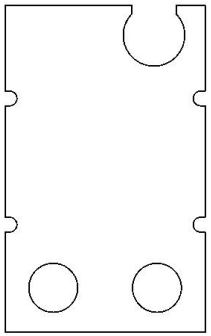

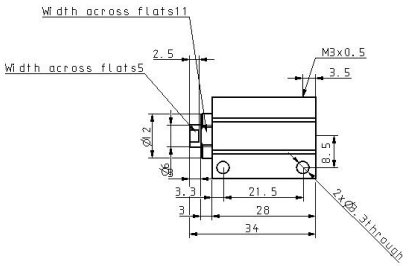

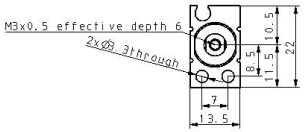

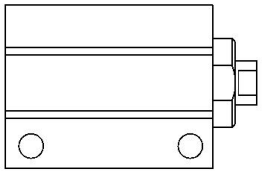

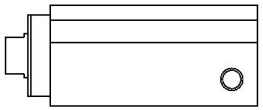

Specifications are subject to change without prior notice and any obligation on the part of the manufacturer.

SMC United Kingdom +34 945184126 sales@smc.uk

Constructions

Single Acting, Spring Return

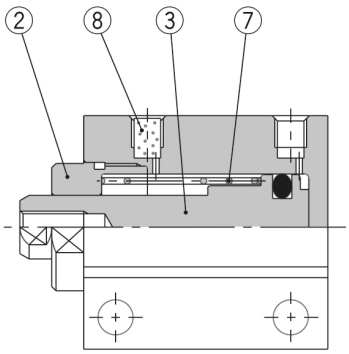

Without magnet

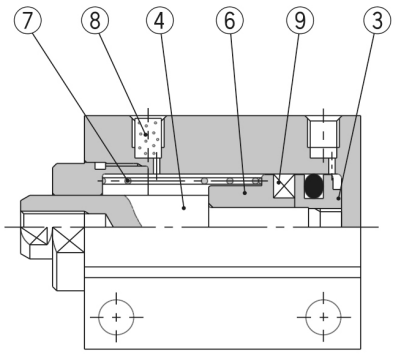

Built-in magnet

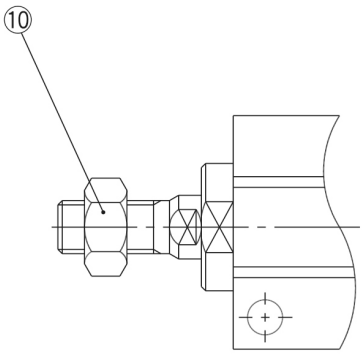

Rod end male threaded

Component Parts

No.	Description		Material	Note
1	**Cylinder tube**		Aluminum alloy	Hard anodized
2	**Rod cover**		Copper alloy	Electroless nickel plated
3	**Piston**	**Without switch**	Stainless steel	
		With switch	Aluminum alloy	Chromated
4	**Piston rod**		Stainless steel	
5	**Seal retainer**		Aluminum alloy	Chromated (CUJB4 only)
6	**Magnet retainer**		Aluminum alloy	Chromated
7	**Return spring**		Piano wire	
8	**Bronze element**		Sintered metallic BC	
9	**Magnet**		—	
10	**Rod end nut**		Iron	Nickel plated
11	**Piston seal**		NBR	
12	**Rod seal**		NBR	
13	**Tube gasket**		NBR	

Specifications are subject to change without prior notice and any obligation on the part of the manufacturer.

SMC United Kingdom +34 945184126 sales@smc.uk

Additional information

Catalogue	CUJ-C_EU.pdf
Operation manuals	cuj_cuj_-om0001j.pdf

Specifications are subject to change without prior notice and any obligation on the part of the manufacturer.

SMC United Kingdom +34 945184126 sales@smc.uk