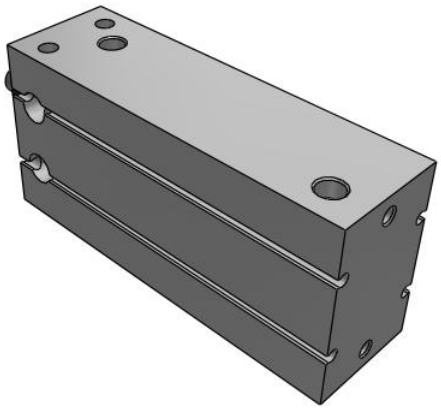

C(D)U, Free Mount Cylinder, Long Stroke

CDU32TF-80D

Datasheet

General series information

- Bore sizes from 6mm to 32mm available
- Stroke lengths up to 100mm
- Any surfaces can be used for mounting
- Space saving
- Auto-switch capable

Double-acting, single-rod cylinder

Standard specifications

Magnet	D (Built-in)
Bore Size	32 mm
Port Thread	TF (G1/8)
Stroke	80 mm
Auto Switch	No Switch
Lead Wire or Pre-wired Connector	0.5 m (Or None in the Case of No Switch)
Number	2 pcs. (Or None in Case of No Switch)
Maximum operating pressure	0.7 MPa
Minimum operating pressure	0.05 MPa
Proof pressure	1.05 MPa
Theoretical cylinder force, advance stroke (at 0.5 MPa)	402 N
Theoretical cylinder force, return stroke (at 0.5 MPa)	346 N
Type of cushioning	Rubber Bumper
Piston rod end	Male Thread
Lubrication	Non-lube
Fluid	Air
Ambient and fluid temperature	-10 - 60 °C
Stroke length tolerance	0+1.0 mm

Specifications are subject to change without prior notice and any obligation on the part of the manufacturer.

SMC CORPORATION Zuazobidea 14, 01012, Vitoria-Gasteiz, Álava +34 945184100 +34 945184126 www.smc.eu support.marketingeurope@smc.com

Thread Tolerance	JIS Class2
Piston speed	50 - 500 mm/s
Weight	0.622 Kg

Specifications are subject to change without prior notice and any obligation on the part of the manufacturer.

SMC CORPORATION Zuazobidea 14, 01012, Vitoria-Gasteiz, Álava +34 945184100 +34 945184126 www.smc.eu support.marketingeurope@smc.com

Dimensions

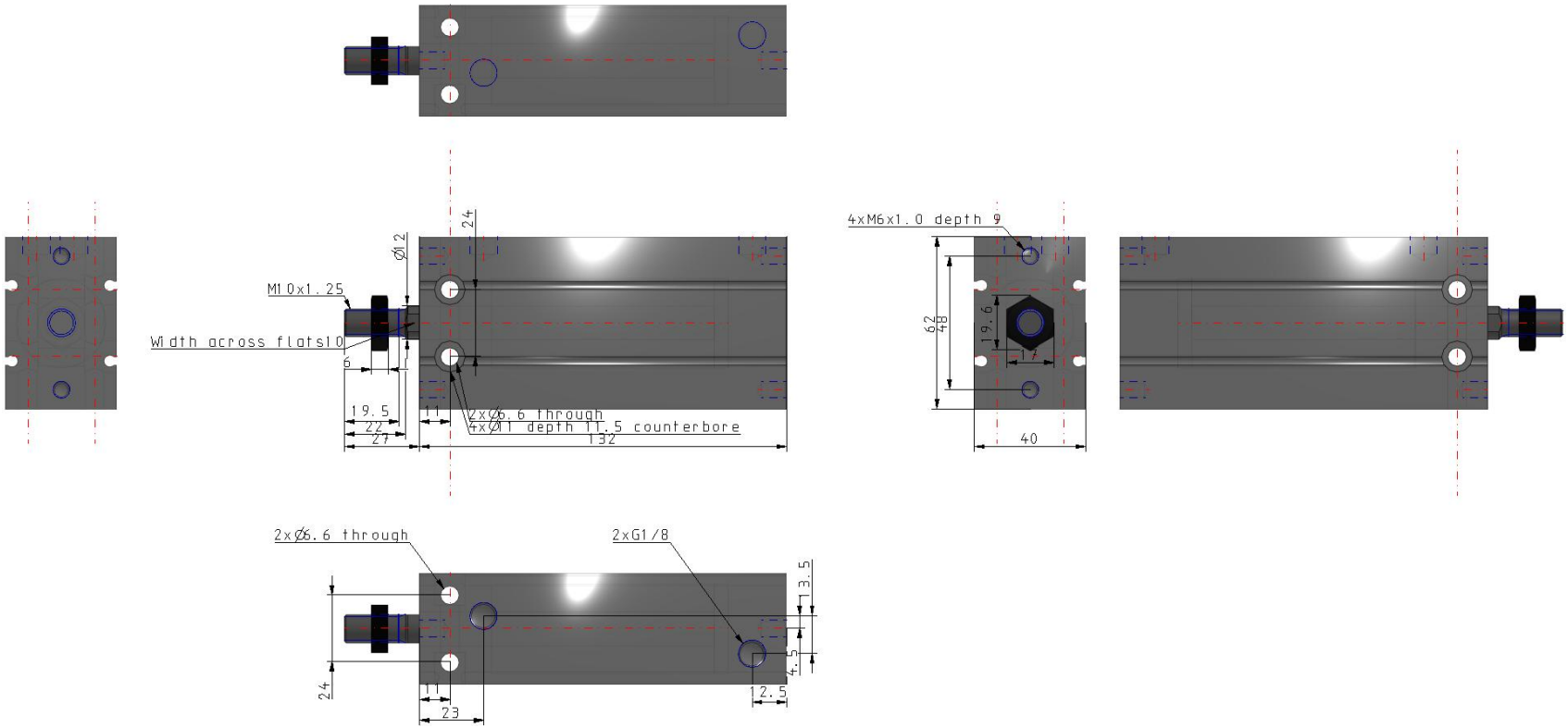

Specifications are subject to change without prior notice and any obligation on the part of the manufacturer.

SMC CORPORATION Zuazobidea 14, 01012, Vitoria-Gasteiz, Álava +34 945184100 +34 945184126 www.smc.eu support.marketingeurope@smc.com

Constructions

ø16 to ø32 With auto switch

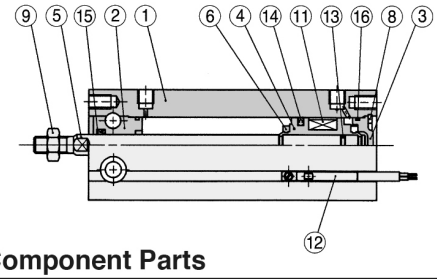

Component Parts

No.	Description	Material	Note
1	Cylinder tube	Aluminum alloy	Hard anodized
2	Rod cover	Aluminum bearing alloy	Hard anodized
3	Head cover	Brass	ø6 to ø10, Electroless nickel plated
		Aluminum alloy	ø16 to ø32, Clear chromated
4	Piston	Brass	ø6 to ø10
		Aluminum alloy	ø16 to ø32, Chromated
5	Piston rod	Stainless steel	
6	Bumper A	Urethane	
7	Bumper B	Urethane	

Component Parts

No.	Description	Material	Note
8	Snap ring	Carbon tool steel	Phosphate coated
9	Rod end nut	Carbon steel	Nickel plated
10	Magnet holder	Brass	ø6
11	Magnet	Magnetic material	
12	Auto switch	—	
13	Piston gasket	NBR	
14	Piston seal		
15	Rod seal		
16	Gasket		

Specifications are subject to change without prior notice and any obligation on the part of the manufacturer.

SMC CORPORATION Zuazobidea 14, 01012, Vitoria-Gasteiz, Álava +34 945184100 +34 945184126 www.smc.eu support.marketingeurope@smc.com

Additional information

Catalogue	CU_B_EU.pdf
Operation manuals	OM_CU_OM0002EN-A.pdf

Specifications are subject to change without prior notice and any obligation on the part of the manufacturer.

SMC CORPORATION Zuazobidea 14, 01012, Vitoria-Gasteiz, Álava +34 945184100 +34 945184126 www.smc.eu support.marketingeurope@smc.com