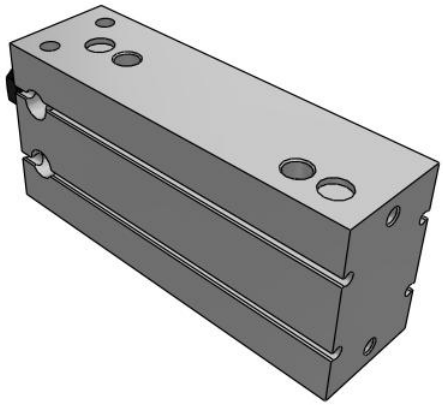

C(D)U-A, Free Mount Cylinder with Air Cushion

CDU32TF-80A

Datasheet

General series information

- Free mount cylinder with air cushion
- Bore sizes (mm): 20, 25, 32
- Stroke lengths up to 100mm
- Reduced impact noise at stroke end
- Auto switch capable

Double-acting, single-rod cylinder

Standard specifications

Magnet	D (Built-in)
Bore Size	32 mm
Thread	TF [G (32 Bore)]
Stroke	80 mm
Auto Switch	No Switch
Lead Wire or Pre-wired Connector	0.5 m (Or None in the Case of No Switch)
Number	2 pcs. (Or None in Case of No Switch)
Maximum operating pressure	0.7 MPa
Minimum operating pressure	0.08 MPa
Proof pressure	1.0 MPa
Theoretical cylinder force, advance stroke (at 0.5 MPa)	402 N
Theoretical cylinder force, return stroke (at 0.5 MPa)	346 N
Piston rod end	Male Thread
Lubrication	Non-lube
Fluid	Air
Ambient and fluid temperature	-10 - 60 °C
Stroke length tolerance	0+1.0 mm
Thread Tolerance	JIS Class2

Specifications are subject to change without prior notice and any obligation on the part of the manufacturer.

SMC CORPORATION Zuazobidea 14, 01012, Vitoria-Gasteiz, Álava +34 945184100 +34 945184126 www.smc.eu support.marketingeurope@smc.com

Piston speed	50 - 500 mm/s
Weight	0.763 Kg

Specifications are subject to change without prior notice and any obligation on the part of the manufacturer.

SMC CORPORATION Zuazobidea 14, 01012, Vitoria-Gasteiz, Álava +34 945184100 +34 945184126 www.smc.eu support.marketingeurope@smc.com

Dimensions

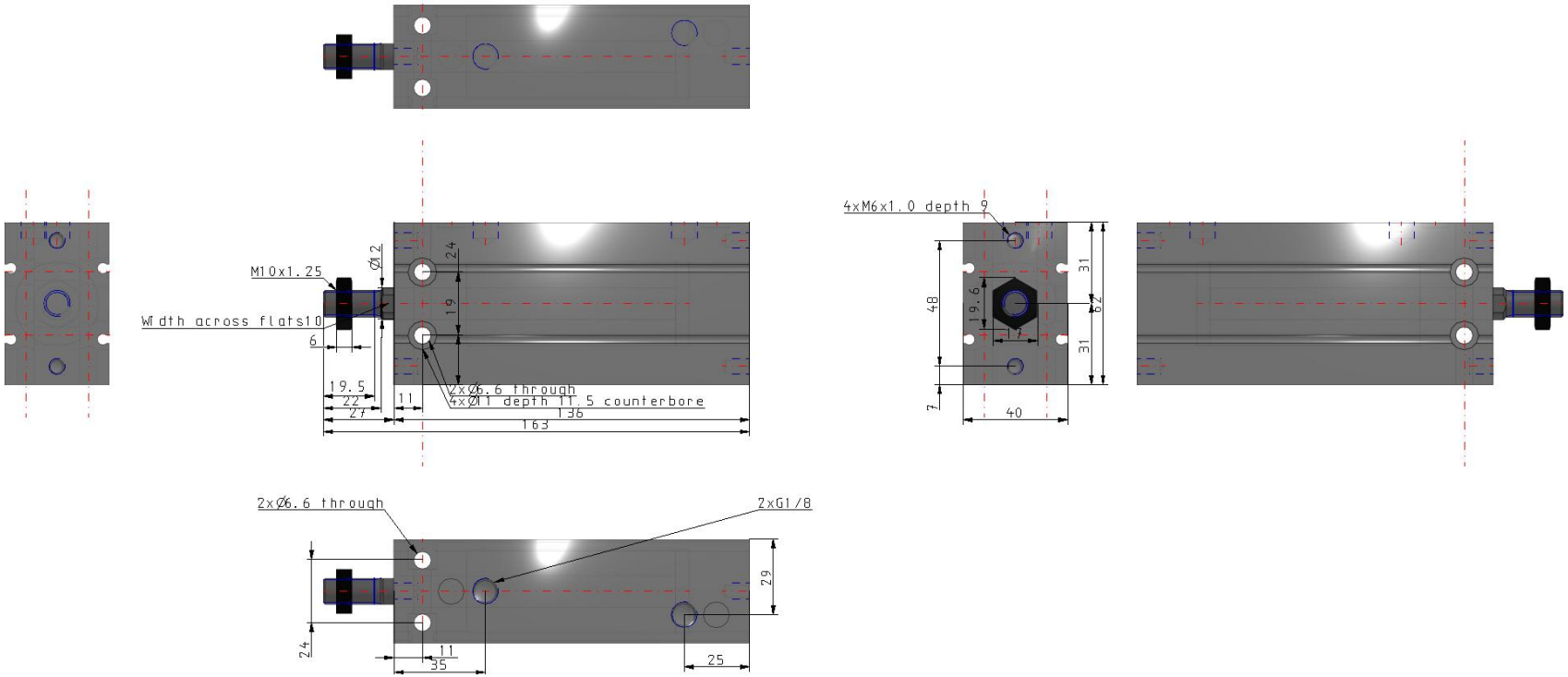

Specifications are subject to change without prior notice and any obligation on the part of the manufacturer.

SMC CORPORATION Zuazobidea 14, 01012, Vitoria-Gasteiz, Álava +34 945184100 +34 945184126 www.smc.eu support.marketingeurope@smc.com

Constructions

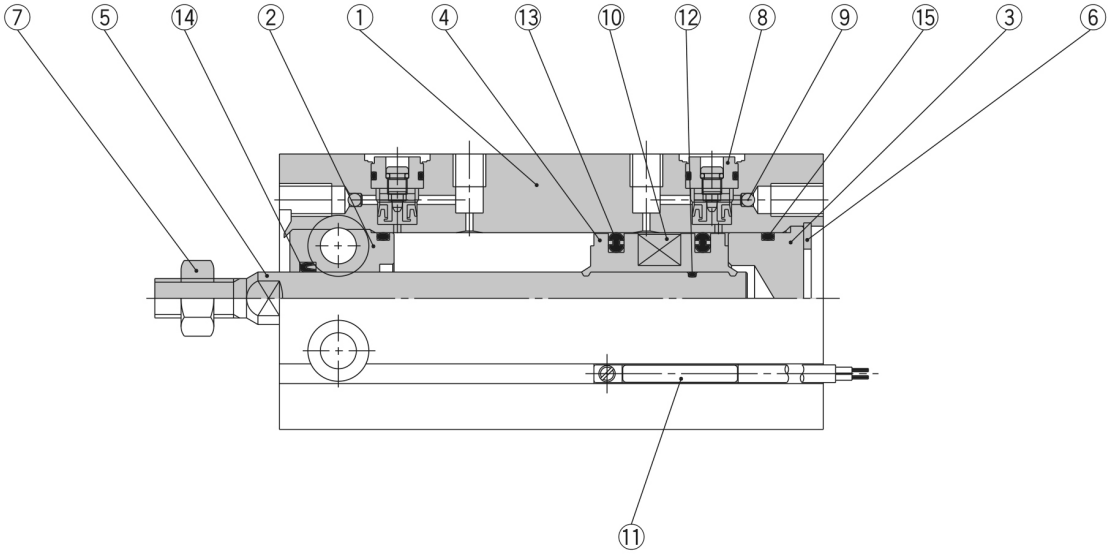

Component Parts

No.	Description	Material	No. of pcs.	Note
1	Cylinder tube	Aluminum alloy	1	Hard anodized
2	Rod cover/Bearing	Aluminum bearing alloy	1	Hard anodized
3	Head cover	Aluminum alloy	1	Clear chromated
4	Piston	Aluminum alloy	1	Chromated
5	Piston rod	Stainless steel	1	
6	Snap ring	Carbon tool steel	1	Phosphate coated
7	Rod end nut	Carbon steel	1	Nickel plated
8	Cushion needle assembly	—	(2)	
9	Steel ball	Carbon steel	2	
10	Magnet	Magnetic material	1	
11	Auto switch	—	(2)	D-AF9□ type
12	Piston gasket	NBR	1	
13	Piston seal	NBR	2	
14	Rod seal	NBR	1	
15	Gasket	NBR	1	

Replacement Parts: Seal Kit

Bore size (mm)	Kit no.	Contents
ø20	CU20A-PS	13, 14, and 15
ø25	CU25A-PS	
ø32	CU32A-PS	

Specifications are subject to change without prior notice and any obligation on the part of the manufacturer.

SMC CORPORATION Zuazobidea 14, 01012, Vitoria-Gasteiz, Álava +34 945184100 +34 945184126 www.smc.eu support.marketingeurope@smc.com

Additional information

Catalogue	CU_A_EU.pdf

Specifications are subject to change without prior notice and any obligation on the part of the manufacturer.

SMC CORPORATION Zuazobidea 14, 01012, Vitoria-Gasteiz, Álava +34 945184100 +34 945184126 www.smc.eu support.marketingeurope@smc.com