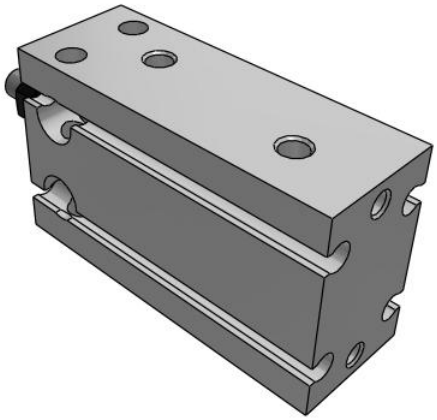

C(D)U, Free Mount Cylinder, Double Acting

CDU16-15D

Datasheet

General series information

- Bore sizes from 6mm to 32mm available
- Stroke lengths up to 50mm
- Any surfaces can be used for mounting
- Space saving
- Auto-switch capable

Double-acting, single-rod cylinder

Standard specifications

Bore Size	16 mm
Stroke	15 mm
Lead Wire or Prewired Connector	0.5 m (Or None in the Case of No Switch)
Number	2 pcs. (Or None in the Case of No Switch)
Magnet	D (Built-in Magnet)
Port Thread	M5x0.8; Rc1/8 for ø32
Auto Switch	No Switch
Maximum operating pressure	0.7 MPa
Minimum operating pressure	0.06 MPa
Proof pressure	1.05 MPa
Theoretical cylinder force, advance stroke (at 0.5 MPa)	101 N
Theoretical cylinder force, return stroke (at 0.5 MPa)	86 N
Type of cushioning	Rubber Bumper
Piston rod end	Male Thread
Lubrication	Non-lube
Fluid	Air
Ambient and fluid temperature	-10 - 60 °C
Thread Tolerance	JIS Class2

Specifications are subject to change without prior notice and any obligation on the part of the manufacturer.

SMC United Kingdom +34 945184126 sales@smc.uk

Piston speed	50 - 500 mm/s
Weight	0.062 Kg

Specifications are subject to change without prior notice and any obligation on the part of the manufacturer.

SMC United Kingdom +34 945184126 sales@smc.uk

Dimensions

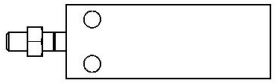

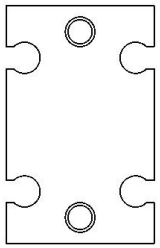

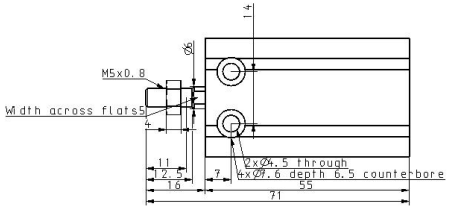

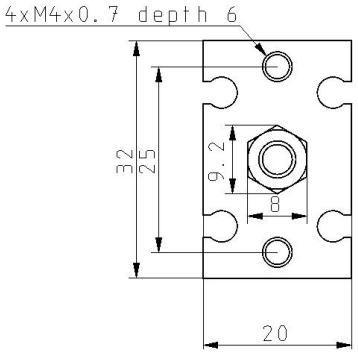

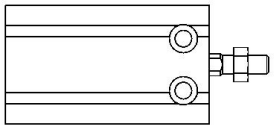

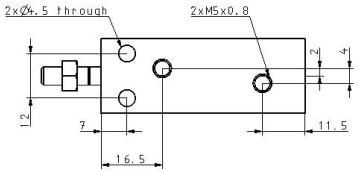

Specifications are subject to change without prior notice and any obligation on the part of the manufacturer.

Constructions

ø16 to ø32 With auto switch

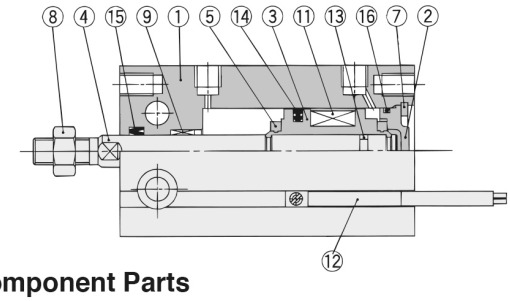

Component Parts

No.	Description	Material	Note
1	Cylinder tube	Aluminum alloy	Hard anodized
2	Head cover	Brass	ø6 to ø10, Electroless nickel plated
		Aluminum alloy	ø16 to ø32, Clear chromated
3	Piston	Brass	ø6 to ø10
		Aluminum alloy	ø16 to ø32, Chromated
4	Piston rod	Stainless steel	
5	Bumper A	Urethane	
6	Bumper B	Urethane	
7	Snap ring	Carbon tool steel	Phosphate coated

Component Parts

No.	Description	Material	Note
8	Rod end nut	Carbon steel	Nickel plated
9	Bushing	Oil-impregnated sintered alloy	
10	Magnet holder	Brass	ø6
11	Magnet	Magnetic material	
12	Auto switch	—	
13	Piston gasket	NBR	
14*	Piston seal		
15*	Rod seal		
16*	Gasket		

Specifications are subject to change without prior notice and any obligation on the part of the manufacturer.

SMC United Kingdom +34 945184126 sales@smc.uk

Additional information

Catalogue	CU_B_EU.pdf
Operation manuals	OM_CU_OM0002EN-A.pdf

Specifications are subject to change without prior notice and any obligation on the part of the manufacturer.

SMC United Kingdom +34 945184126 sales@smc.uk