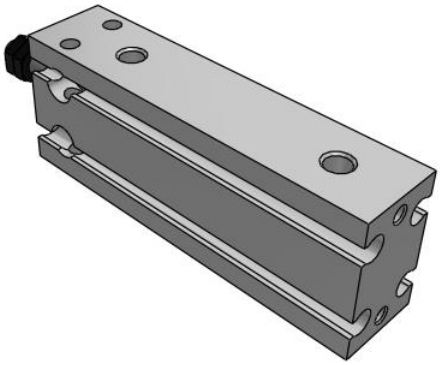

# C(D)U, Free Mount Cylinder, Double Acting

## CDU10-30D

Datasheet

## General series information

- Bore sizes from 6mm to 32mm available
- Stroke lengths up to 50mm
- Any surfaces can be used for mounting
- Space saving
- Auto-switch capable

*Double-acting, single-rod cylinder*

## Standard specifications

| | |
|---|---|
| Bore Size | 10 mm |
| Stroke | 30 mm |
| Lead Wire or Prewired Connector | 0.5 m (Or None in the Case of No Switch) |
| Number | 2 pcs. (Or None in the Case of No Switch) |
| Magnet | D (Built-in Magnet) |
| Port Thread | M5x0.8; Rc1/8 for ø32 |
| Auto Switch | No Switch |
| Maximum operating pressure | 0.7 MPa |
| Minimum operating pressure | 0.06 MPa |
| Proof pressure | 1.05 MPa |
| Theoretical cylinder force, advance stroke (at 0.5 MPa) | 39.3 N |
| Theoretical cylinder force, return stroke (at 0.5 MPa) | 33 N |
| Type of cushioning | Rubber Bumper |
| Piston rod end | Male Thread |
| Lubrication | Non-lube |
| Fluid | Air |
| Ambient and fluid temperature | -10 - 60 °C |
| Thread Tolerance | JIS Class2 |

*Specifications are subject to change without prior notice and any obligation on the part of the manufacturer.*



SMC United Kingdom +34 945184126 sales@smc.uk

| | |
|---|---|
| Piston speed | 50 - 500 mm/s |
| Weight | 0.056 Kg |

Specifications are subject to change without prior notice and any obligation on the part of the manufacturer.



SMC United Kingdom +34 945184126 sales@smc.uk

# Dimensions

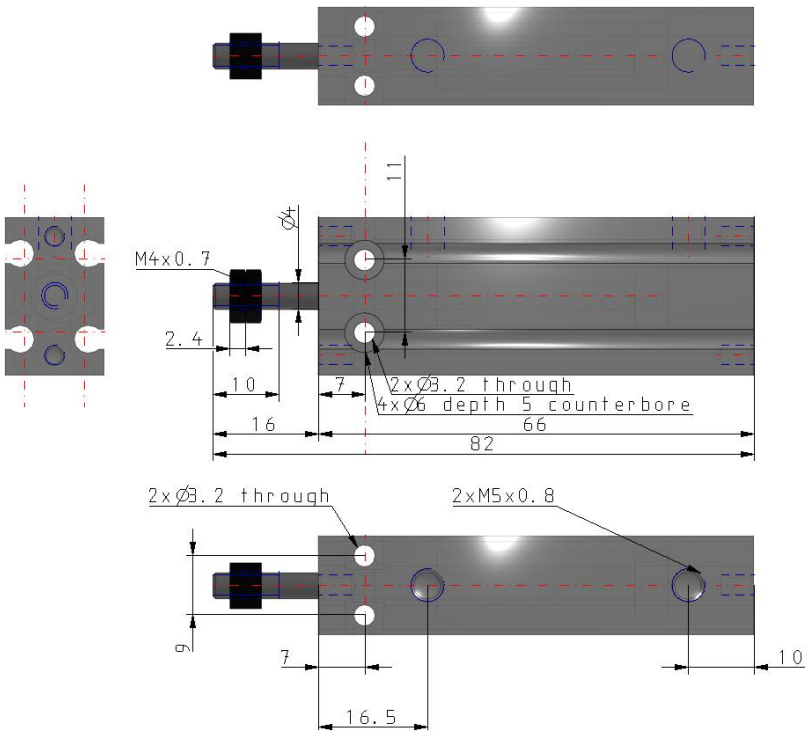


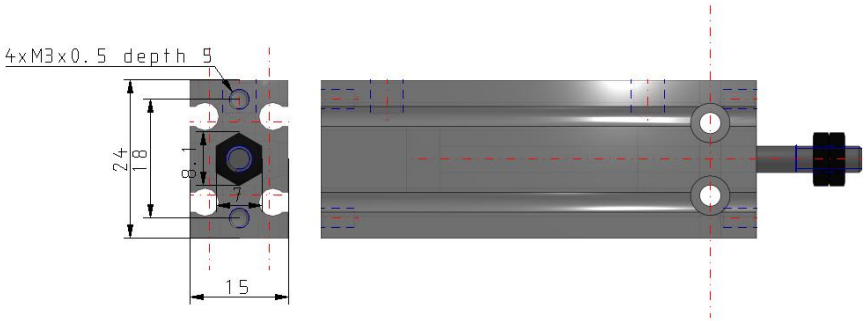


Specifications are subject to change without prior notice and any obligation on the part of the manufacturer.

# Constructions

## ø10 With auto switch

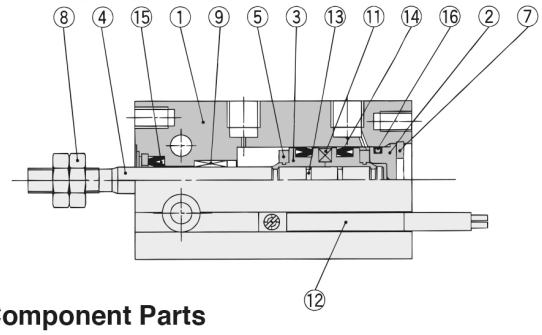


### Component Parts

| No. | Description | Material | Note |
|---|---|---|---|
| 1 | Cylinder tube | Aluminum alloy | Hard anodized |
| 2 | Head cover | Brass | ø6 to ø10, Electroless nickel plated |
| | | Aluminum alloy | ø16 to ø32, Clear chromated |
| 3 | Piston | Brass | ø6 to ø10 |
| | | Aluminum alloy | ø16 to ø32, Chromated |
| 4 | Piston rod | Stainless steel | |
| 5 | Bumper A | Urethane | |
| 6 | Bumper B | Urethane | |
| 7 | Snap ring | Carbon tool steel | Phosphate coated |

### Component Parts

| No. | Description | Material | Note |
|---|---|---|---|
| 8 | Rod end nut | Carbon steel | Nickel plated |
| 9 | Bushing | Oil-impregnated sintered alloy | |
| 10 | Magnet holder | Brass | ø6 |
| 11 | Magnet | Magnetic material | |
| 12 | Auto switch | — | |
| 13 | Piston gasket | NBR | |
| 14* | Piston seal | | |
| 15* | Rod seal | | |
| 16* | Gasket | | |

Specifications are subject to change without prior notice and any obligation on the part of the manufacturer.



SMC United Kingdom +34 945184126 sales@smc.uk

## Additional information

| | |
|---|---|
| Catalogue | CU_B_EU.pdf |
| Operation manuals | OM_CU_OM0002EN-A.pdf |

Specifications are subject to change without prior notice and any obligation on the part of the manufacturer.



SMC United Kingdom +34 945184126 sales@smc.uk