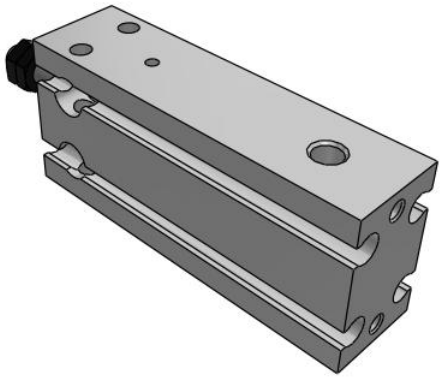

C(D)U, Free Mount Cylinder, Single Acting

CDU10-15S

Datasheet

General series information

- Bore sizes from 6mm to 32mm available
- Stroke lengths up to 15mm
- Spring return, spring extend
- Space saving
- Auto-switch capable

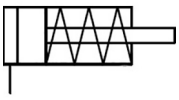

Single-acting cylinder, single piston rod, return stroke by spring

Standard specifications

Bore Size	10 mm
Stroke	15 mm
Action	S (Single Acting Spring Return)
Lead Wire or Prewired Connector	0.5 m (Or None in the Case of No Switch)
Number	2 pcs. (Or None in the Case of No Switch)
Magnet	D (Built-in Magnet)
Port Thread	M5x0.8; Rc1/8 for ø32
Auto Switch	No Switch
Maximum operating pressure	0.7 MPa
Minimum operating pressure	0.15 MPa
Proof pressure	1.05 MPa
Theoretical cylinder force, advance stroke (at 0.5 MPa)	32.4 N
Type of cushioning	Rubber Bumper
Piston rod end	Male Thread
Lubrication	Non-lube
Fluid	Air
Ambient and fluid temperature	-10 - 60 °C
Stroke length tolerance	0+1.0 mm

Specifications are subject to change without prior notice and any obligation on the part of the manufacturer.

SMC United Kingdom +34 945184126 sales@smc.uk

Thread Tolerance	JIS Class2
Piston speed	50 - 500 mm/s
Weight	0.044 Kg

Specifications are subject to change without prior notice and any obligation on the part of the manufacturer.

SMC United Kingdom +34 945184126 sales@smc.uk

Dimensions

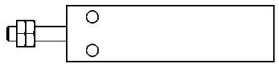

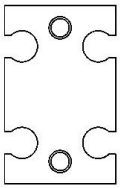

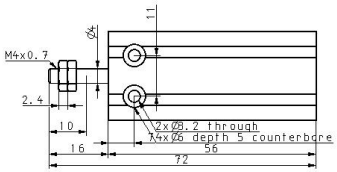

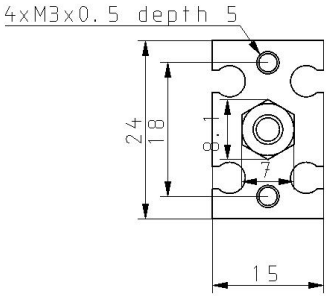

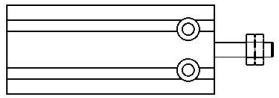

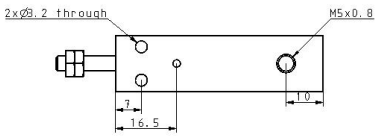

Specifications are subject to change without prior notice and any obligation on the part of the manufacturer.

Constructions

ø10 With auto switch

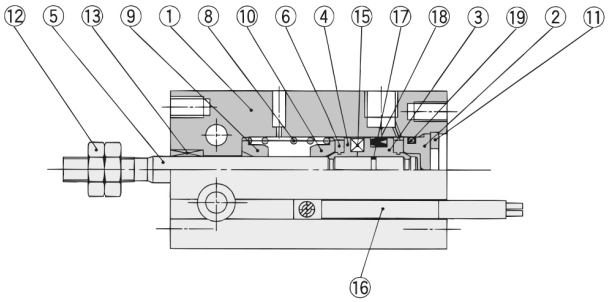

Component Parts

No.	Description	Material	Note
1	Cylinder tube	Aluminum alloy	Hard anodized
2	Head cover	Brass	ø6 to ø10, Electroless nickel plated
		Aluminum alloy	ø16 to ø32, Clear chromated
3	Piston	Brass	ø6 to ø10
		Aluminum alloy	ø16 to ø32, Chromated
4	Piston	Brass	ø10
5	Piston rod	Stainless steel	
6	Bumper A	Urethane	
7	Bumper B	Urethane	
8	Return spring	Piano wire	Zinc chromated

Component Parts

No.	Description	Material	Note
9	Spring seat	Brass	
10	Spring seat	Brass	
11	Snap ring	Carbon tool steel	Phosphate coated
12	Rod end nut	Carbon steel	Nickel plated
13	Bushing	Oil-impregnated sintered alloy	
14	Magnet holder	Brass	ø6
15	Magnet	Magnetic material	
16	Auto switch	—	
17	Piston gasket	NBR	
18*	Piston seal		
19*	Gasket		

Specifications are subject to change without prior notice and any obligation on the part of the manufacturer.

SMC United Kingdom +34 945184126 sales@smc.uk

Additional information

Catalogue	CU_B_EU.pdf
Operation manuals	OM_CU_OM0002EN-A.pdf

Specifications are subject to change without prior notice and any obligation on the part of the manufacturer.

SMC United Kingdom +34 945184126 sales@smc.uk