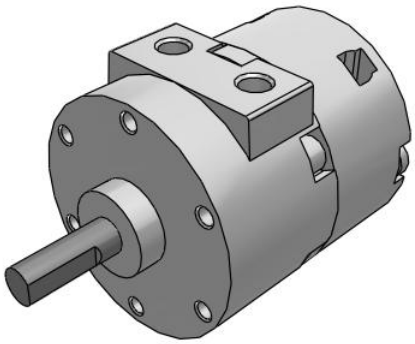

C(D)RB, Rotary Actuator, Standard Type

CDRBS15-180

Datasheet

General series information

- Sizes: 10, 15, 20, 30, 40
- Built-in angle adjustment unit ±10°.
- Built-in auto switch unit.

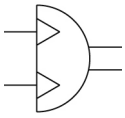

Semi-rotary actuator, double acting

Standard specifications

Magnet	D (Built-in Magnet)
Shaft Type	S (Single Shaft with Single Flat)
Size	15
Rotating Angle	180°
Vane Type	Single Vane
Auto Switch	No Switch
Lead Wire or Prewired Connector	0.5m (Or None in the Case of No Switch)
Number	2 pcs. (Or None in the Case of No Switch)
Pressure medium	Air
Maximum operating pressure	0.7 MPa
Minimum operating pressure	0.2 MPa
Proof pressure	1.05 MPa
Maximum ambient temperature	60 °C
Minimum ambient temperature	5 °C
Rotation time adjustment range s/90º	0.03 - 0.5
Shaft load: Allowable radial load	15 N
F118- Shaft-load-thrust	10 N
Allowable kinetic energy	0,001 J
Port size	M5 x 0.8
Rotation angle	90 +5°/-0° , 180 +5°/-0°

Specifications are subject to change without prior notice and any obligation on the part of the manufacturer.

SMC CORPORATION Zuazobidea 14, 01012, Vitoria-Gasteiz, Álava +34 945184100 +34 945184126 www.smc.eu emcmarketing@smc.smces.es

Weight	0.045 Kg

Specifications are subject to change without prior notice and any obligation on the part of the manufacturer.

SMC CORPORATION Zuazobidea 14, 01012, Vitoria-Gasteiz, Álava +34 945184100 +34 945184126 www.smc.eu emcmarketing@smc.smces.es

Dimensions

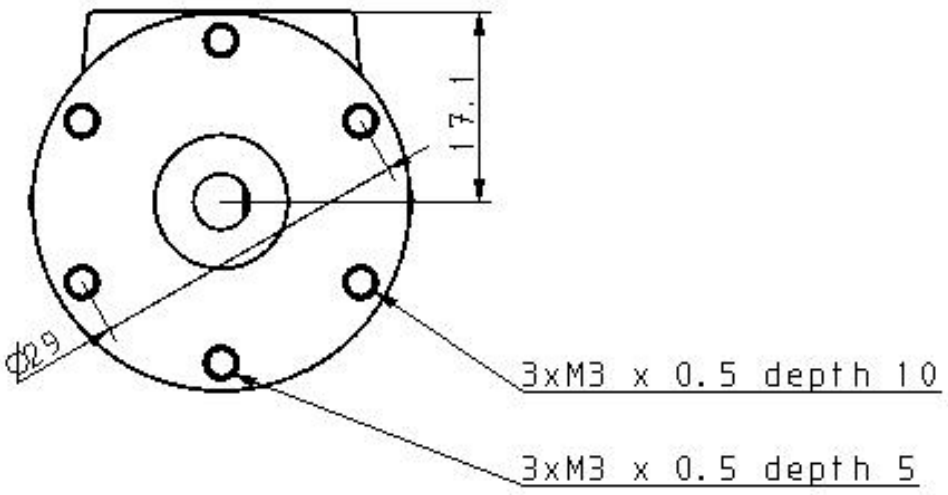

Specifications are subject to change without prior notice and any obligation on the part of the manufacturer.

SMC CORPORATION Zuazobidea 14, 01012, Vitoria-Gasteiz, Álava +34 945184100 +34 945184126 www.smc.eu emcmarketing@smc.smces.es

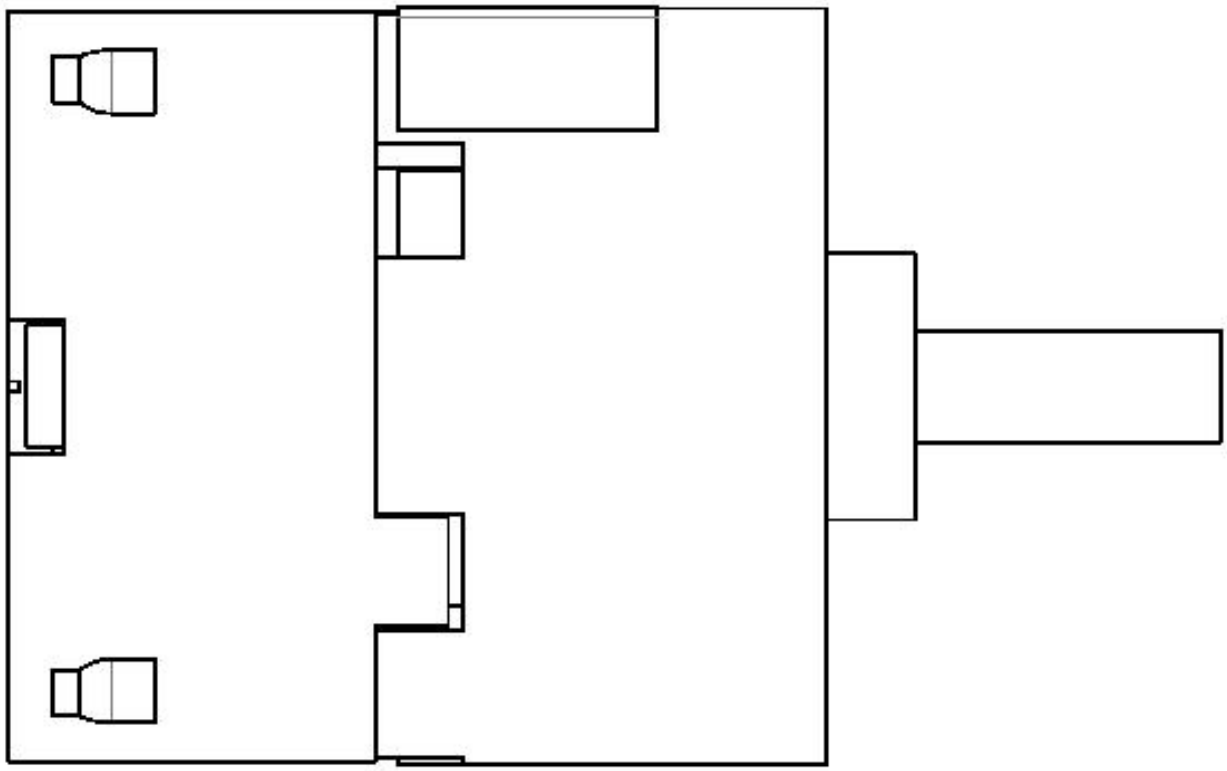

Specifications are subject to change without prior notice and any obligation on the part of the manufacturer.

SMC CORPORATION Zuazobidea 14, 01012, Vitoria-Gasteiz, Álava +34 945184100 +34 945184126 www.smc.eu emcmarketing@smc.smces.es

Constructions

Size: 10, 15

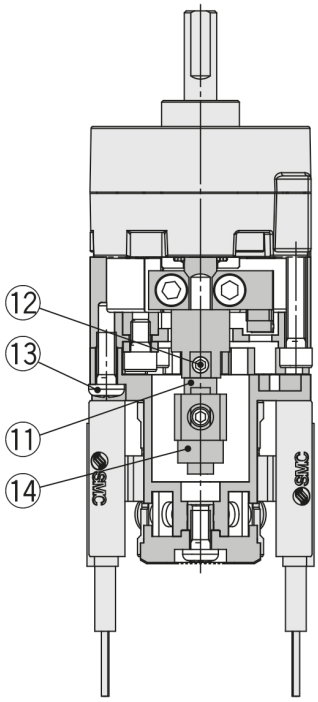

Size: 10

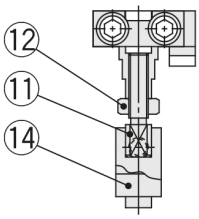

Component Parts

No.	Description	Material	Note
1	**Stopper ring**	Aluminium alloy	
2	**Stopper lever**	Chrome molybdenum steel	
3	**Lever retainer**	Rolled steel	Zinc chromated
4	**Rubber bumper**	NBR	
5	**Stopper block**	Chrome molybdenum steel	Zinc chromated
6	**Block retainer**	Rolled steel	Zinc chromated
7	**Cap**	Resin	
8	Hexagon socket head cap screw	Stainless steel	Special screw
9	Hexagon socket head cap screw	Stainless steel	Special screw
10	Hexagon socket head cap screw	Stainless steel	Special screw
11	**Joint**		
12	Hexagon socket set screw	Stainless steel	Hexagon nut will be
	Hexagon nut	Stainless steel	
13	Cross recessed round head screw	Stainless steel	
14	**Magnet lever**	—	

Specifications are subject to change without prior notice and any obligation on the part of the manufacturer.

SMC CORPORATION Zuazobidea 14, 01012, Vitoria-Gasteiz, Álava +34 945184100 +34 945184126 www.smc.eu emcmarketing@smc.smces.es

Additional information

Catalogue CRB-D_EU.pdf

Specifications are subject to change without prior notice and any obligation on the part of the manufacturer.

SMC CORPORATION Zuazobidea 14, 01012, Vitoria-Gasteiz, Álava +34 945184100 +34 945184126 www.smc.eu emcmarketing@smc.smces.es