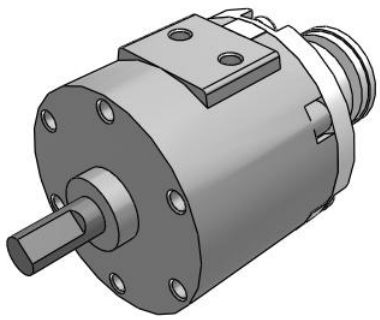

C(D)RB2*W10~40-Z, Rotary Actuator, New Vane Style

CDRB2BW30-100DZ

Datasheet

General series information

- Standard type.
- Piping ports are located on the flat surface.
- Many variations of shaft-end shape (6 types).

Standard specifications

Magnet	D (Built-in)
Mounting	B (Basic)
Standard Shaft Type	W (Double Shaft with Single Flat)
Angle Adjusting Unit	None
Size	30 mm
Rotation Angle, Vane	100D (Angle: 100 Double Vane)
Port	Side
Auto Switch	No Switch
Lead Wire or Pre-wired Connector	0.5 m (Or None in the Case of No Switch)
Number	2 pcs. (Or None in Case of No Switch)
Pressure medium	Air (Non-lube)
Maximum temperature of pressure medium	60 ºC
Minimum temperature of pressure medium	5 ºC
Maximum ambient temperature	60 ºC
Minimum ambient temperature	5 ºC
Number of pneumatic connections	2 pcs.
Geometric form of the piston rod	Single rod

Specifications are subject to change without prior notice and any obligation on the part of the manufacturer.

SMC CORPORATION Zuazobidea 14, 01012, Vitoria-Gasteiz, Álava +34 945184100 +34 945184126 www.smc.eu support.marketingeurope@smc.com

Dimensions

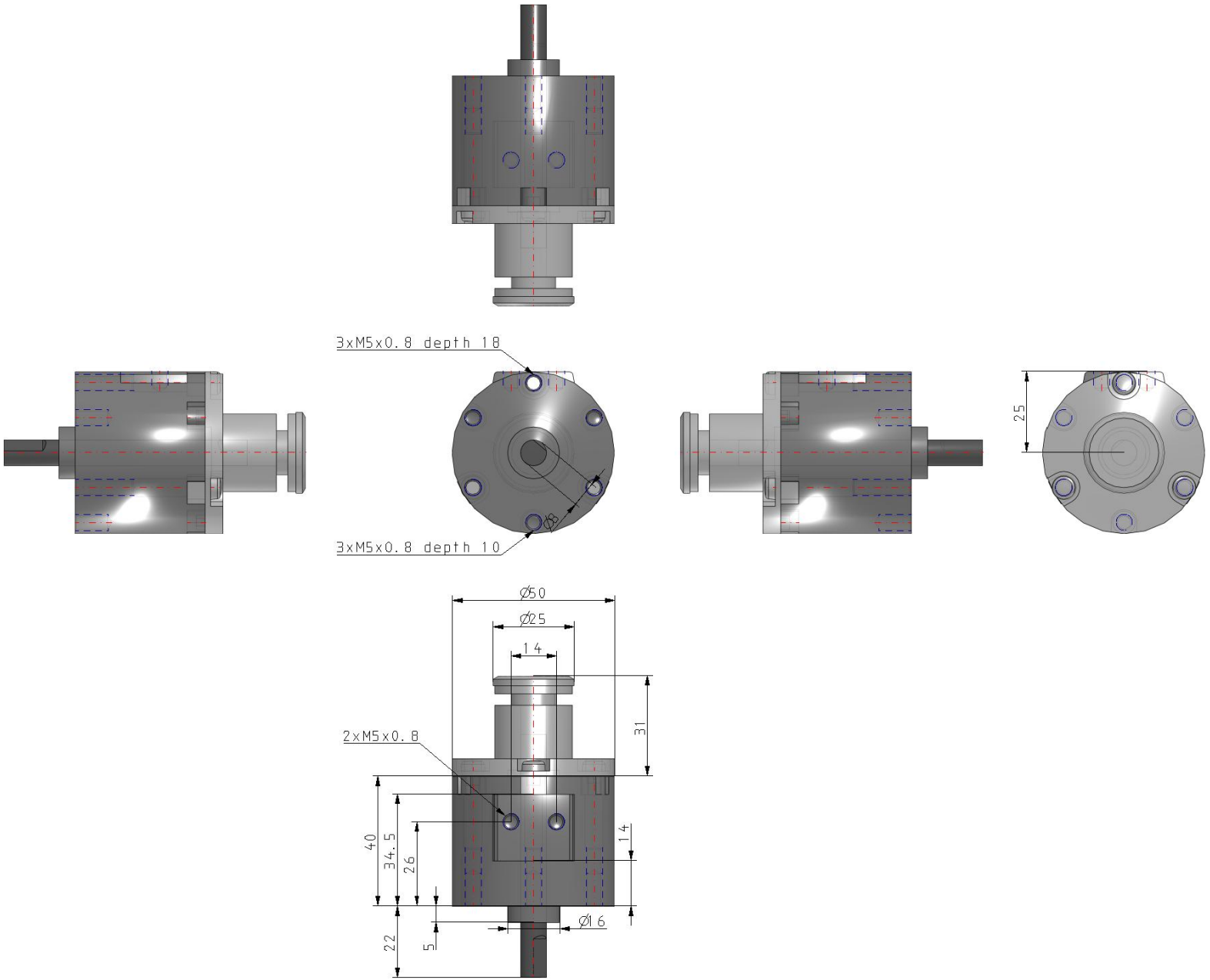

Specifications are subject to change without prior notice and any obligation on the part of the manufacturer.

SMC CORPORATION Zuazobidea 14, 01012, Vitoria-Gasteiz, Álava +34 945184100 +34 945184126 www.smc.eu support.marketingeurope@smc.com

Additional information

Catalogue	CRB2-C_EU.pdf
Operation manuals	OM_CRB2_OM00001EN-B.pdf

Specifications are subject to change without prior notice and any obligation on the part of the manufacturer.

SMC CORPORATION Zuazobidea 14, 01012, Vitoria-Gasteiz, Álava +34 945184100 +34 945184126 www.smc.eu support.marketingeurope@smc.com