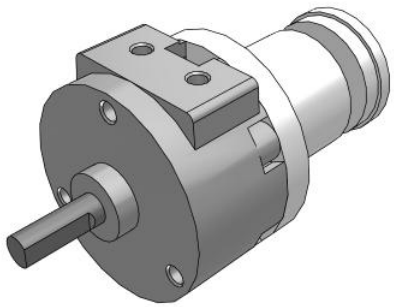

# C(D)RB2*W10~40-Z, Rotary Actuator, New Vane Style

CDRB2BW10-180SZ

Datasheet

## General series information

- Standard type.
- Piping ports are located on the flat surface.
- Many variations of shaft-end shape (6 types).

## Standard specifications

| | |
|---|---|
| Mounting | B (Basic) |
| Angle Adjusting Unit | None |
| Lead Wire or Prewired Connector | 0.5m (Or None in the Case of No Switch) |
| Number | 2 pcs. (Or None in the Case of No Switch) |
| Rotation Angle - Vane | 180S (Angle: 180 Single Vane) |
| Magnet | D (Built-in) |
| Size | 10 mm |
| Port | Side |
| Auto Switch | No Switch |
| Standard Shaft Type | W (Double Shaft with Single Flat) |
| Pressure medium | Air (Non-lube) |
| Maximum temperature of pressure medium | 60 ºC |
| Minimum temperature of pressure medium | 5 ºC |
| Maximum ambient temperature | 60 ºC |
| Minimum ambient temperature | 5 ºC |
| Number of pneumatic connections | 2 pcs. |
| Geometric form of the piston rod | Single rod |
| Weight | 0.041 Kg |

Specifications are subject to change without prior notice and any obligation on the part of the manufacturer.



SMC United Kingdom +34 945184126 sales@smc.uk

# Dimensions

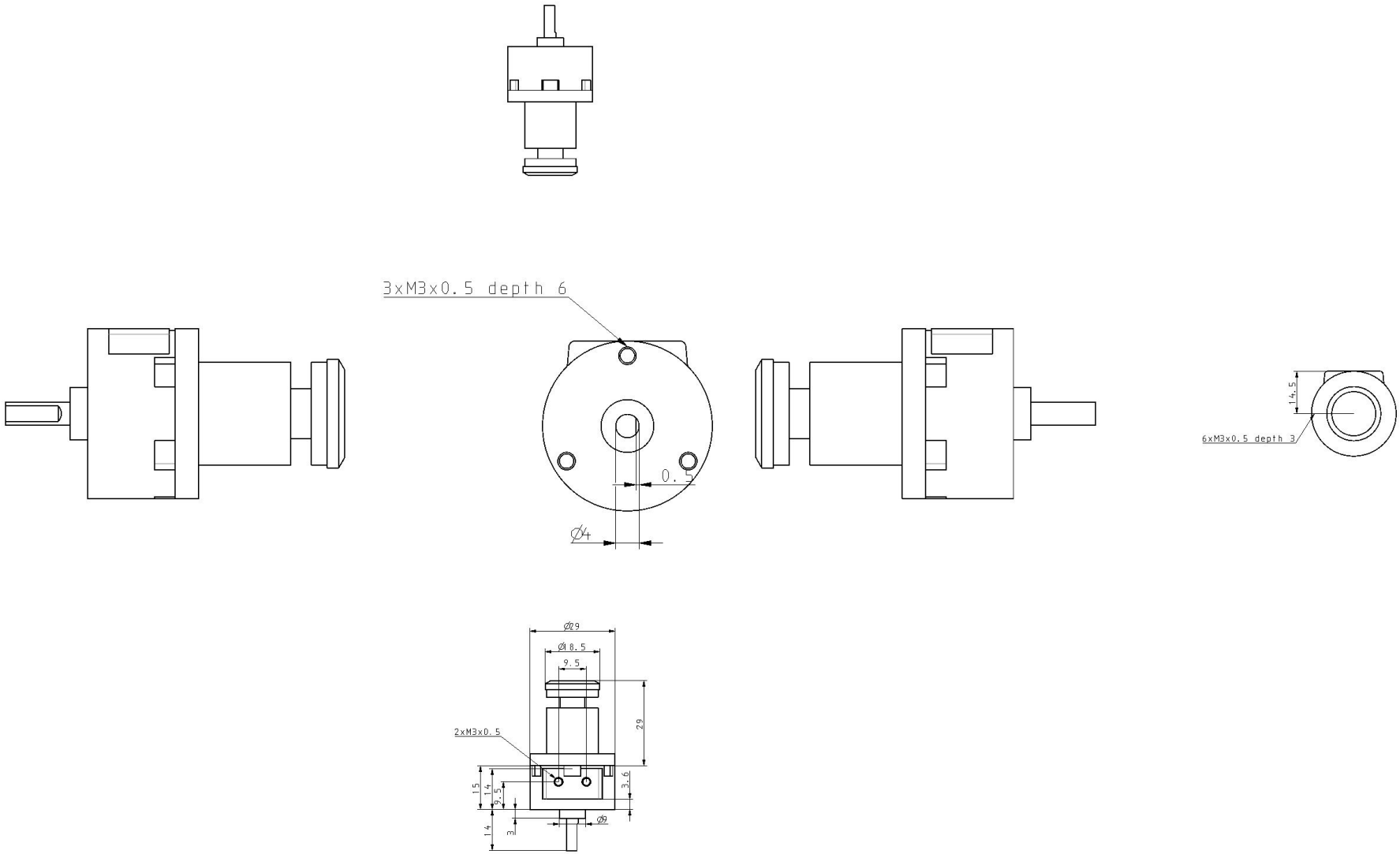


Specifications are subject to change without prior notice and any obligation on the part of the manufacturer.



SMC United Kingdom +34 945184126 sales@smc.uk

## Additional information

| | |
|---|---|
| Catalogue | CRB2-C_EU.pdf |
| Operation manuals | OM_CRB2_OM00001EN-B.pdf |

Specifications are subject to change without prior notice and any obligation on the part of the manufacturer.



SMC United Kingdom +34 945184126 sales@smc.uk