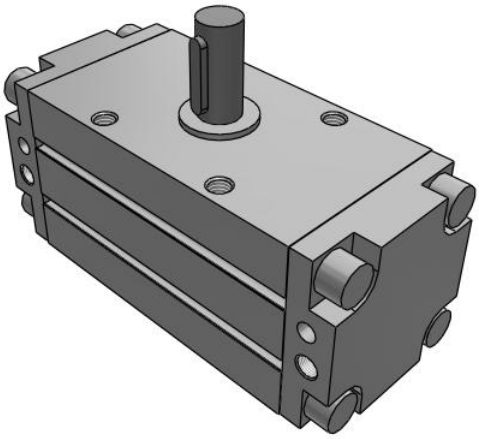

C(D)RA1-Z*30-100, Rotary Actuator, Rack & Pinion, Standard

CDRA1BW63TF-100CZ

Datasheet

General series information

At SMC we are continuing to focus on optimising the performance and functionality of our products by upgrading our rack and pinion type rotary actuator. The CRA1-Z Series allows for the cushion valve to be adjusted more easily, is lighter in weight and allows greater flexibility to the auto switch mounting. The cushion valve is indented, features a retaining ring that prevents a drop out and can be adjusted by simply using a hexagon wrench. The CRA1-Z is also interchangeable with the current CRA1 model as the shaft diameter, exterior and mounting dimensions are the same. Thanks to the port, cushion valve and auto switch positioned on the same surface, the CRA1-Z Series is easy to manipulate. Also the round type auto switches can be mounted from the front onto two surfaces and positioned anywhere on the mounting groove at any time. Ideal to meet the demands of several applications, such as robotics and material handling, the CRA1-Z is available in eight different shaft type variations and four rotating angles as standard.

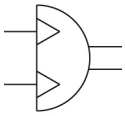

Semi-rotary actuator, double acting

Standard specifications

Magnet	D (Built-in)
Mounting	B (Basic)
Shaft Type	W (Double Shaft)
Angle Adjusting Unit	None
Type	Pneumatic
Size	63 mm
Port Thread	TF (G)
Rotation Angle	100°
Type of Cushioning	C (Air Cushion)
Auto Switch	No Switch
Lead Wire or Pre-wired Connector	0.5 m (Or None in the Case of No Switch)
Number	2 pcs. (Or None in Case of No Switch)
Pressure medium	Compressed air (non-lube)
Maximum temperature of pressure medium	60 °C

Specifications are subject to change without prior notice and any obligation on the part of the manufacturer.

SMC CORPORATION Zuazobidea 14, 01012, Vitoria-Gasteiz, Álava +34 945184100 +34 945184126 www.smc.eu support.marketingeurope@smc.com

Minimum temperature of pressure medium	0 °C
Maximum operating pressure	1.0 MPa
Minimum operating pressure	0.1 MPa
Maximum ambient temperature	60 °C
Minimum ambient temperature	0 °C
Number of pneumatic connections	2 pcs.
Pneumatic input connection	G 1/8
Mode of operation of drive	Double acting
Weight	2.600 Kg

Specifications are subject to change without prior notice and any obligation on the part of the manufacturer.

SMC CORPORATION Zuazobidea 14, 01012, Vitoria-Gasteiz, Álava +34 945184100 +34 945184126 www.smc.eu support.marketingeurope@smc.com

Dimensions

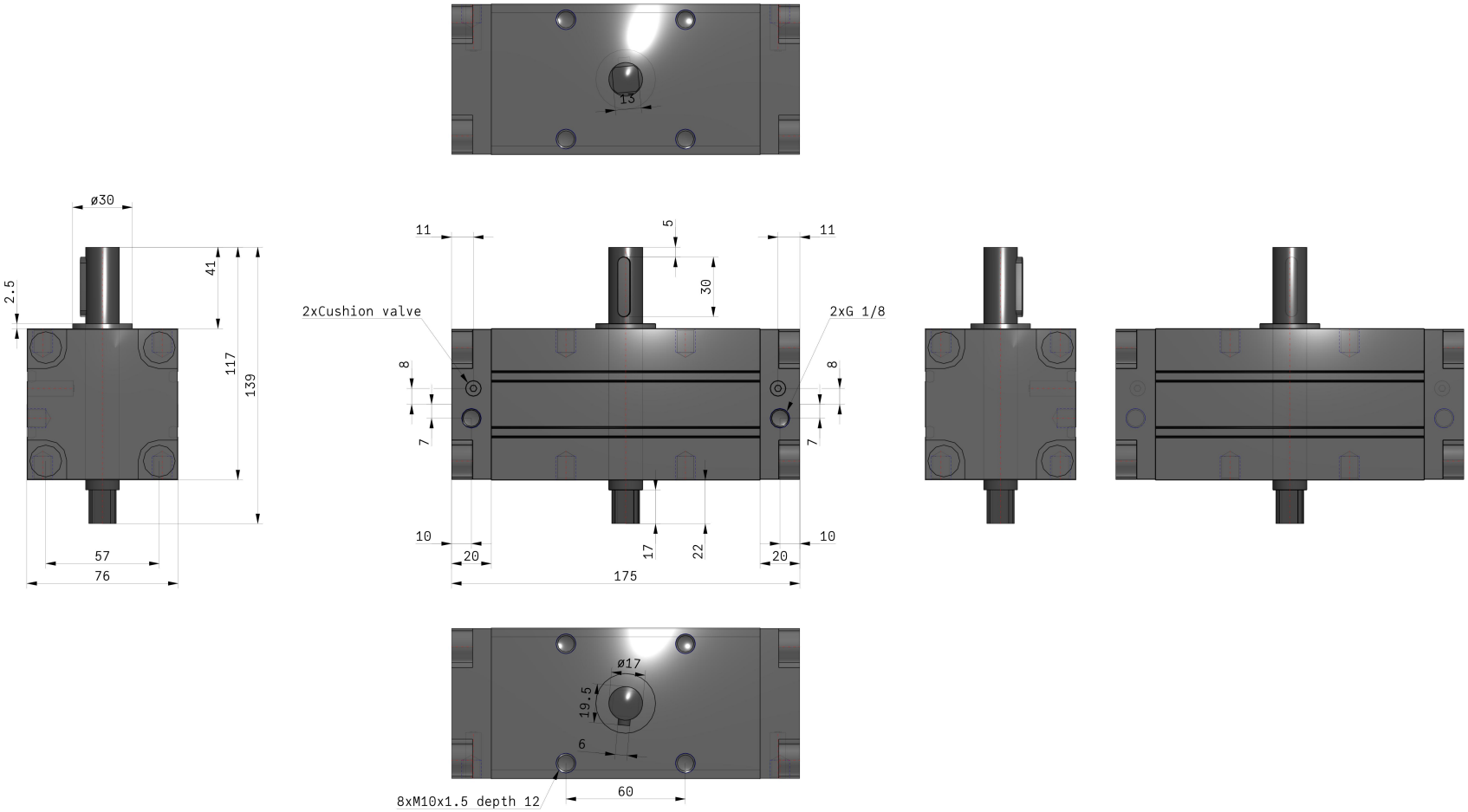

Specifications are subject to change without prior notice and any obligation on the part of the manufacturer.

SMC CORPORATION Zuazobidea 14, 01012, Vitoria-Gasteiz, Álava +34 945184100 +34 945184126 www.smc.eu support.marketingeurope@smc.com

Constructions

Construction: Size 50 to 100

Without air cushion

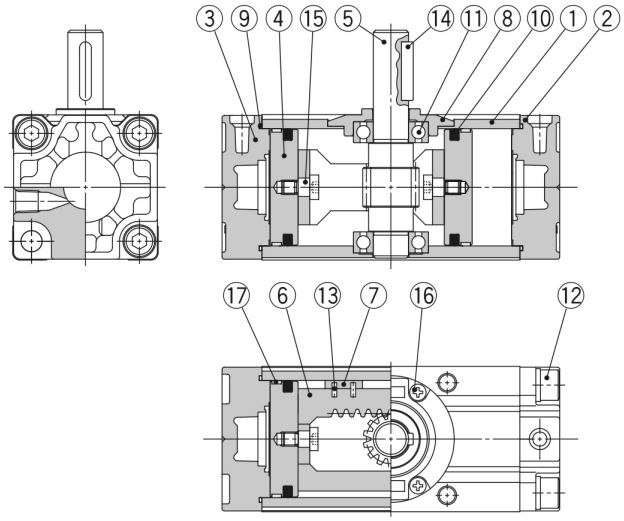

With air cushion

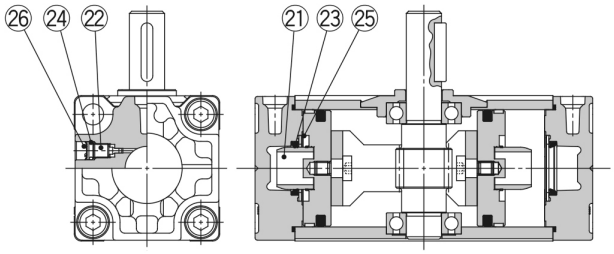

Without air cushion With auto switch

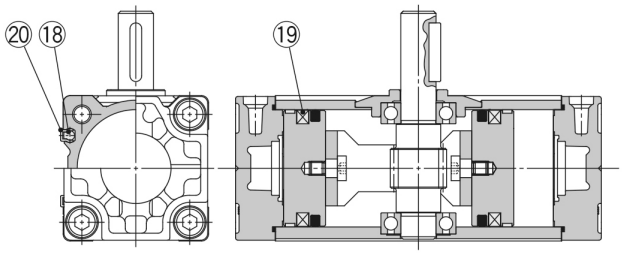

Component Parts

No.	Description	Material	Note
1	**Body**	Aluminium alloy	Anodised
2	**Right cover**	Aluminium alloy	Metallic coating
3	**Left cover**	Aluminium alloy	Metallic coating
4	**Piston**	Aluminium alloy	
5	**Shaft**	Alloy steel	
6	**Rack**	Carbon steel	Nitrided
7	**Slider**	Resin	
8	**Bearing retainer**	Aluminium alloy	Chromated
9	**Tube gasket**	NBR	
10	**Piston seal**	NBR	
11	**Bearing**	High carbon chrome bearing steel	
12	Hexagon socket head cap screw with washer	Alloy steel	Zinc chromated
13	**Spring pin**	Steel	Zinc chromated
14	**Parallel key**	Carbon steel	
15	**Connecting screw**	Carbon steel	Zinc chromated
16	Cross-recessed pan head tapping screw	Steel	Zinc chromated
17	**Wear ring**	Resin	
18	**Auto switch**	—	
19	**Magnet**	—	
20	**Switch spacer**	Resin	
21	**Cushion ring**	Aluminium alloy	Anodised
22	**Cushion valve**	Steel	Zinc chromated
23	**Cushion seal**	Urethane	
24	**O-ring**	NBR	
25	**Seal retainer**	Steel	
26	**Retaining ring**	Steel	

Specifications are subject to change without prior notice and any obligation on the part of the manufacturer.

SMC CORPORATION Zuazobidea 14, 01012, Vitoria-Gasteiz, Álava +34 945184100 +34 945184126 www.smc.eu support.marketingeurope@smc.com

Additional information

Catalogue	CRA1-C-Z_EU.pdf
Operation manuals	OM_CRA1-Z_OM00006EN-E.pdf

Specifications are subject to change without prior notice and any obligation on the part of the manufacturer.

SMC CORPORATION Zuazobidea 14, 01012, Vitoria-Gasteiz, Álava +34 945184100 +34 945184126 www.smc.eu support.marketingeurope@smc.com