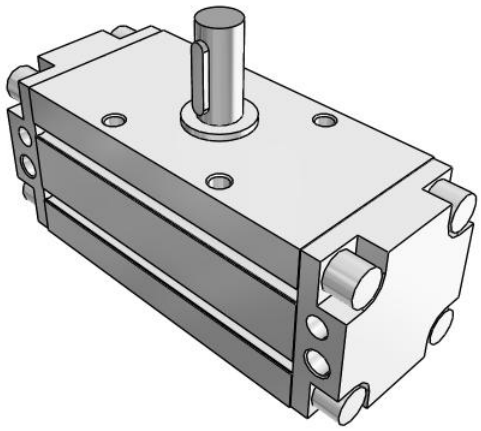

C(D)RA1-Z*30-100, Rotary Actuator, Rack & Pinion, Standard

CDRA1BW50TF-90CZ

Datasheet

General series information

- Rotary actuator
- Sizes: 30, 50, 63, 80, 100
- Rotating angle: 90°, 100°, 180°, 190°
- Adjustable rotation time range: from 0.2 to 5 s/90°.

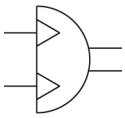

Semi-rotary actuator, double acting

Standard specifications

Mounting	B (Basic)
Type	Pneumatic
Angle Adjusting Unit	None
Lead Wire or Prewired Connector	0.5m (Or None in the Case of No Switch)
Number	2 pcs.
Magnet	D (Built-in)
Size	50 mm
Port Thread	TF (G)
Shaft Type	W (Double Shaft)
Type of Cushioning	C (Air Cushion)
Auto Switch	No Switch
Rotation Angle	90°
Pressure medium	Compressed air (non-lube)
Maximum temperature of pressure medium	60 °C
Minimum temperature of pressure medium	0 °C
Maximum operating pressure	1.0 MPa
Minimum operating pressure	0.1 MPa
Maximum ambient temperature	60 °C
Minimum ambient temperature	0 °C

Specifications are subject to change without prior notice and any obligation on the part of the manufacturer.

SMC United Kingdom +34 945184126 sales@smc.uk

Number of pneumatic connections	2 pcs.
Pneumatic pilot connections	G 1/8
Mode of operation of drive	Double acting

Specifications are subject to change without prior notice and any obligation on the part of the manufacturer.

SMC United Kingdom +34 945184126 sales@smc.uk

Dimensions

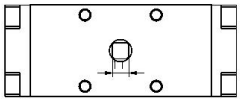

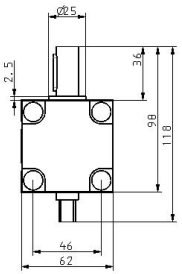

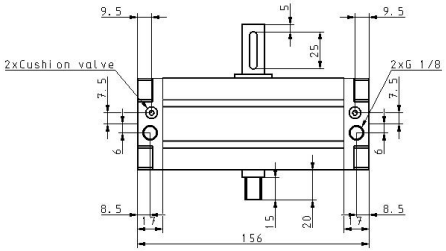

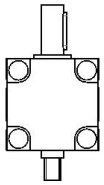

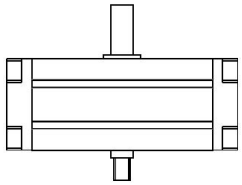

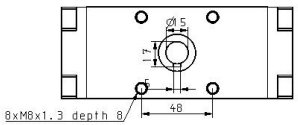

Specifications are subject to change without prior notice and any obligation on the part of the manufacturer.

SMC United Kingdom +34 945184126 sales@smc.uk

Constructions

Construction: Size 50 to 100

Without air cushion

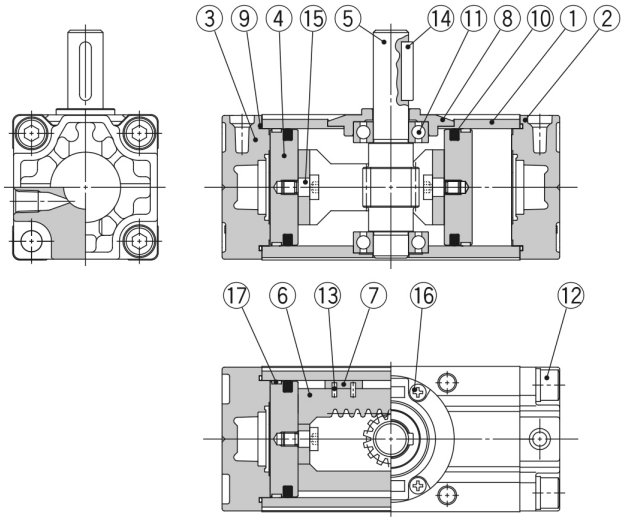

With air cushion

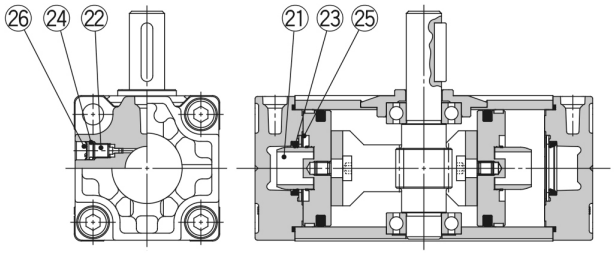

Without air cushion With auto switch

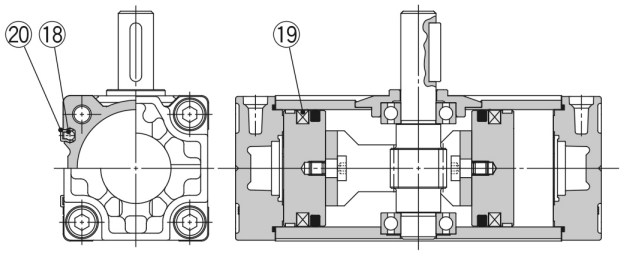

Component Parts

No.	Description	Material	Note
1	**Body**	Aluminium alloy	Anodised
2	**Right cover**	Aluminium alloy	Metallic coating
3	**Left cover**	Aluminium alloy	Metallic coating
4	**Piston**	Aluminium alloy	
5	**Shaft**	Alloy steel	
6	**Rack**	Carbon steel	Nitrided
7	**Slider**	Resin	
8	**Bearing retainer**	Aluminium alloy	Chromated
9	**Tube gasket**	NBR	
10	**Piston seal**	NBR	
11	**Bearing**	High carbon chrome bearing steel	
12	Hexagon socket head cap screw with washer	Alloy steel	Zinc chromated
13	**Spring pin**	Steel	Zinc chromated
14	**Parallel key**	Carbon steel	
15	**Connecting screw**	Carbon steel	Zinc chromated
16	Cross-recessed pan head tapping screw	Steel	Zinc chromated
17	**Wear ring**	Resin	
18	**Auto switch**	—	
19	**Magnet**	—	
20	**Switch spacer**	Resin	
21	**Cushion ring**	Aluminium alloy	Anodised
22	**Cushion valve**	Steel	Zinc chromated
23	**Cushion seal**	Urethane	
24	**O-ring**	NBR	
25	**Seal retainer**	Steel	
26	**Retaining ring**	Steel	

Specifications are subject to change without prior notice and any obligation on the part of the manufacturer.

SMC United Kingdom +34 945184126 sales@smc.uk

Additional information

Catalogue	CRA1-C-Z_EU.pdf
Operation manuals	OM_CRA1-Z_OM00006EN-E.pdf

Specifications are subject to change without prior notice and any obligation on the part of the manufacturer.

SMC United Kingdom +34 945184126 sales@smc.uk