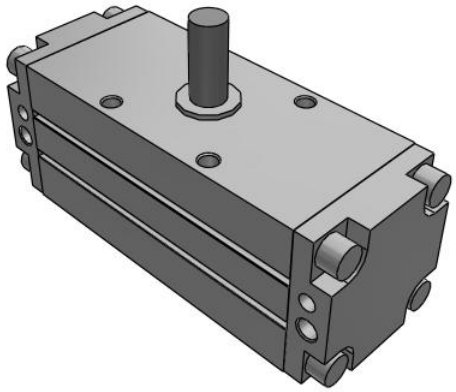

C(D)RA1-Z*30-100, Rotary Actuator, Rack & Pinion, Standard

CDRA1BS80TF-190CZ

Datasheet

General series information

- Rotary actuator
- Sizes: 30, 50, 63, 80, 100
- Rotating angle: 90°, 100°, 180°, 190°
- Adjustable rotation time range: from 0.2 to 5 s/90°.

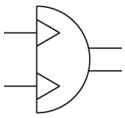

Semi-rotary actuator, double acting

Standard specifications

Magnet	D (Built-in)
Mounting	B (Basic)
Shaft Type	S (Single Shaft)
Angle Adjusting Unit	None
Type	Pneumatic
Size	80 mm
Port Thread	TF (G)
Rotation Angle	190°
Type of Cushioning	C (Air Cushion)
Auto Switch	No Switch
Lead Wire or Prewired Connector	0.5m (Or None in the Case of No Switch)
Number	2 pcs.
Pressure medium	Compressed air (non-lube)
Maximum temperature of pressure medium	60 °C
Minimum temperature of pressure medium	0 °C
Maximum operating pressure	1.0 MPa
Minimum operating pressure	0.1 MPa
Maximum ambient temperature	60 °C
Minimum ambient temperature	0 °C

Specifications are subject to change without prior notice and any obligation on the part of the manufacturer.

SMC CORPORATION Zuazobidea 14, 01012, Vitoria-Gasteiz, Álava +34 945184100 +34 945184126 www.smc.eu emcmarketing@smc.smces.es

Number of pneumatic connections	2 pcs.
Pneumatic input connection	G 1/4
Mode of operation of drive	Double acting
Weight	5.000 Kg

Specifications are subject to change without prior notice and any obligation on the part of the manufacturer.

SMC CORPORATION Zuazobidea 14, 01012, Vitoria-Gasteiz, Álava +34 945184100 +34 945184126 www.smc.eu emcmarketing@smc.smces.es

Dimensions

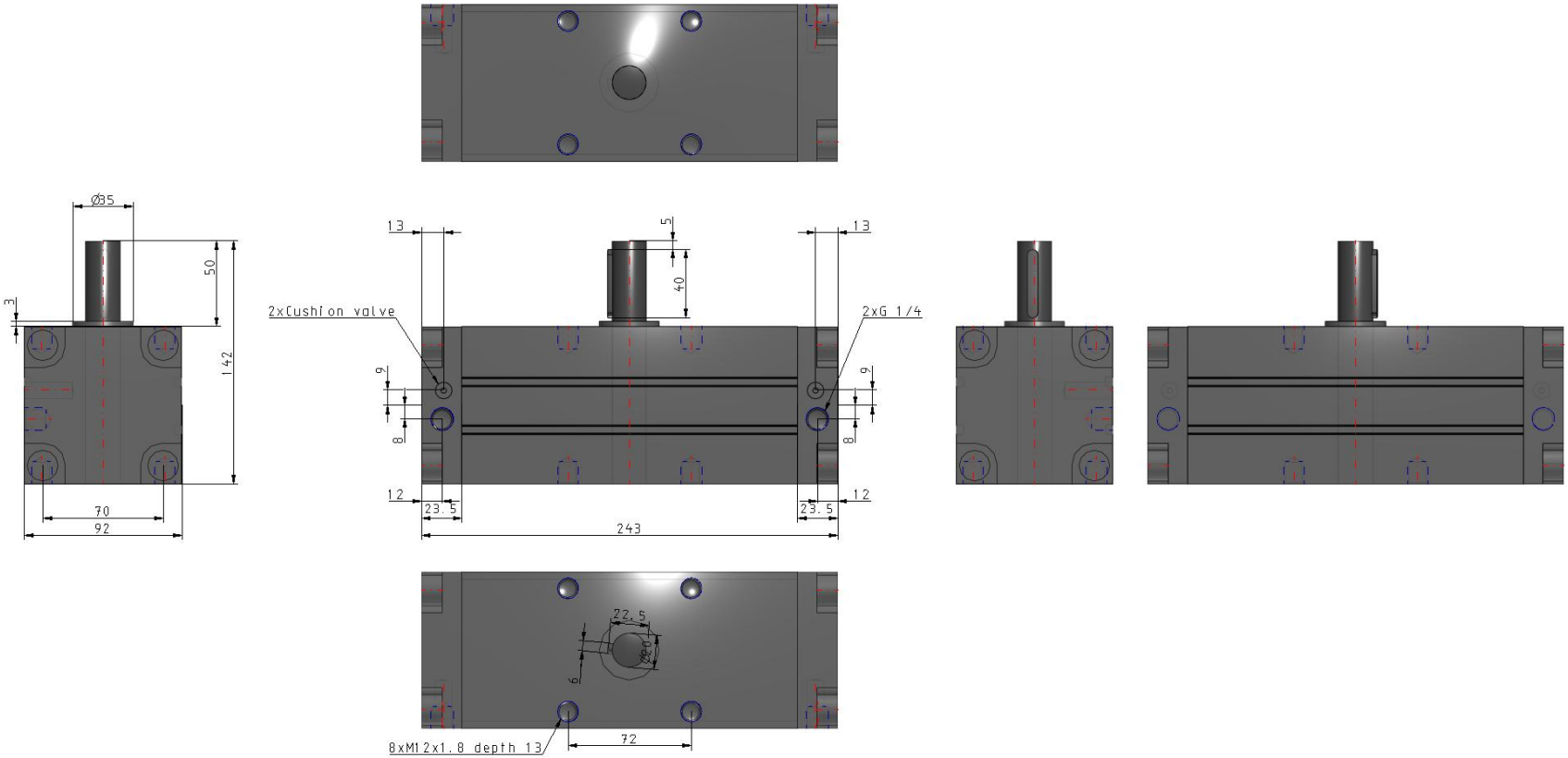

Specifications are subject to change without prior notice and any obligation on the part of the manufacturer.

SMC CORPORATION Zuazobidea 14, 01012, Vitoria-Gasteiz, Álava +34 945184100 +34 945184126 www.smc.eu emcmarketing@smc.smces.es

Constructions

Construction: Size 50 to 100

Without air cushion

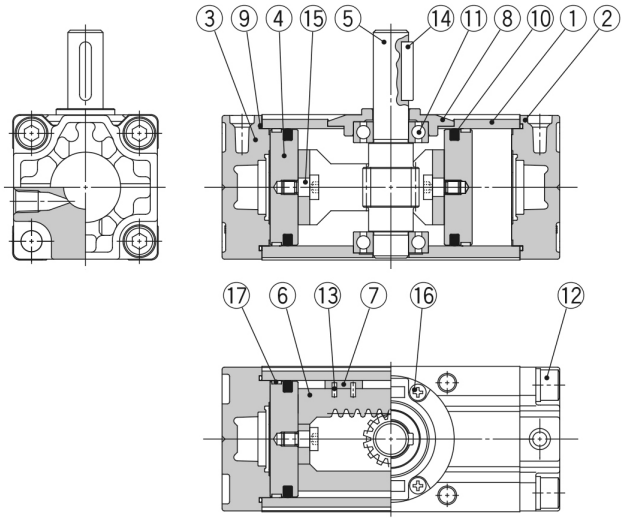

With air cushion

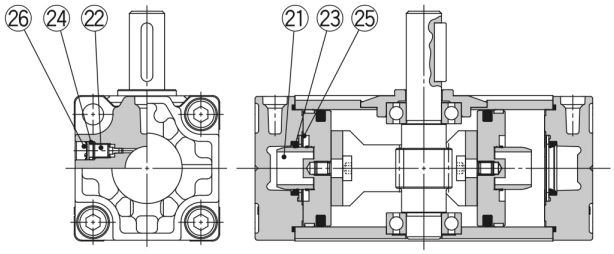

Without air cushion With auto switch

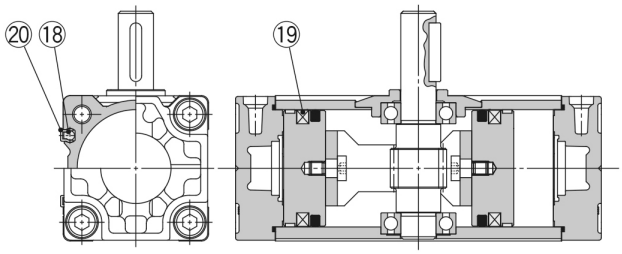

Component Parts

No.	Description	Material	Note
1	**Body**	Aluminium alloy	Anodised
2	**Right cover**	Aluminium alloy	Metallic coating
3	**Left cover**	Aluminium alloy	Metallic coating
4	**Piston**	Aluminium alloy	
5	**Shaft**	Alloy steel	
6	**Rack**	Carbon steel	Nitrided
7	**Slider**	Resin	
8	**Bearing retainer**	Aluminium alloy	Chromated
9	**Tube gasket**	NBR	
10	**Piston seal**	NBR	
11	**Bearing**	High carbon chrome bearing steel	
12	Hexagon socket head cap screw with washer	Alloy steel	Zinc chromated
13	**Spring pin**	Steel	Zinc chromated
14	**Parallel key**	Carbon steel	
15	**Connecting screw**	Carbon steel	Zinc chromated
16	Cross-recessed pan head tapping screw	Steel	Zinc chromated
17	**Wear ring**	Resin	
18	**Auto switch**	—	
19	**Magnet**	—	
20	**Switch spacer**	Resin	
21	**Cushion ring**	Aluminium alloy	Anodised
22	**Cushion valve**	Steel	Zinc chromated
23	**Cushion seal**	Urethane	
24	**O-ring**	NBR	
25	**Seal retainer**	Steel	
26	**Retaining ring**	Steel	

Specifications are subject to change without prior notice and any obligation on the part of the manufacturer.

SMC CORPORATION Zuazobidea 14, 01012, Vitoria-Gasteiz, Álava +34 945184100 +34 945184126 www.smc.eu emcmarketing@smc.smces.es

Additional information

Catalogue	CRA1-C-Z_EU.pdf
Operation manuals	OM_CRA1-Z_OM00006EN-E.pdf

Specifications are subject to change without prior notice and any obligation on the part of the manufacturer.

SMC CORPORATION Zuazobidea 14, 01012, Vitoria-Gasteiz, Álava +34 945184100 +34 945184126 www.smc.eu emcmarketing@smc.smces.es