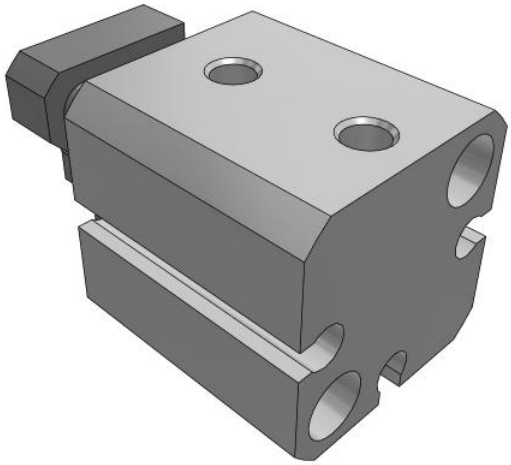

C(D)QM (ø12 to ø32), Compact Cylinder, Guide Rod Type

CDQMB12-5

Datasheet

General series information

- Guide rod type compact cylinder
- Bore sizes (mm): 12, 16, 20, 25, 32
- Standard strokes (mm): 5 to 100
- 4 times the lateral load resistance of the CQ2K
- Non-rotating accuracy 0.2 or less

Standard specifications

Mounting	B [Through Hole (Standard)]
Bore Size	Ø12 mm
Stroke	5
Number	2 pcs. (Or None in Case of No Switch)
Magnet	D (Built-in)
Port Thread	M Thread; Rc
Lead Wire or Pre-wired Connector	0.5 m
Auto Switch	No Switch
Pressure medium	Compressed air
Number of pneumatic connections	2 pcs.
Weight	0.052 Kg

Specifications are subject to change without prior notice and any obligation on the part of the manufacturer.

SMC United Kingdom +34 945184126 sales@smc.uk

Dimensions

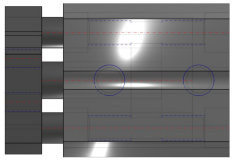

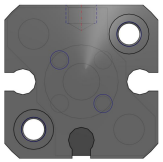

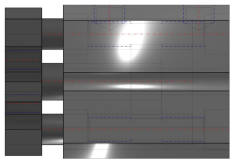

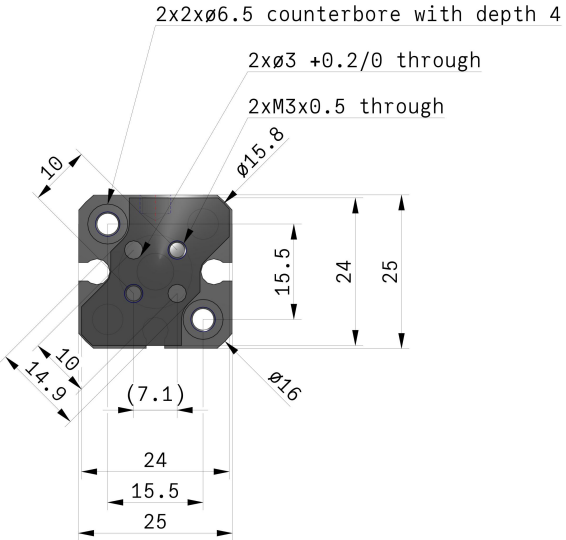

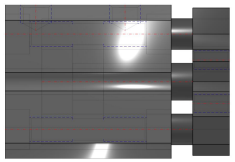

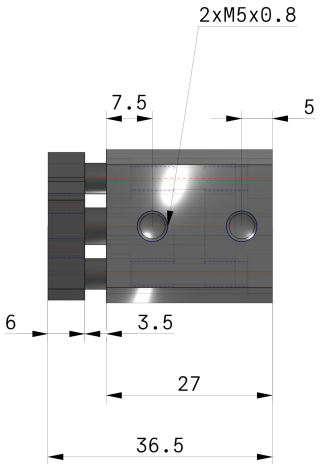

Specifications are subject to change without prior notice and any obligation on the part of the manufacturer.

Additional information

Catalogue	CQM_EU.pdf
Operation manuals	cqm_op_manual_cqm_-om0001c.pdf

Specifications are subject to change without prior notice and any obligation on the part of the manufacturer.

SMC United Kingdom +34 945184126 sales@smc.uk