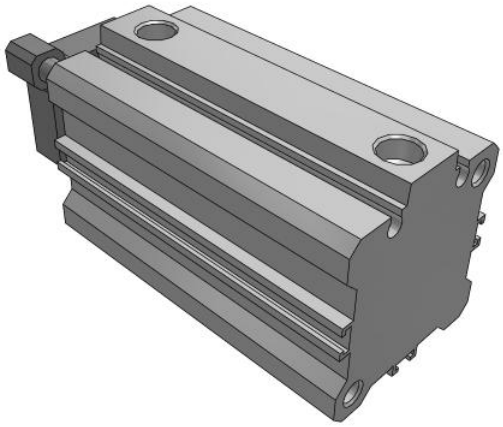

C(D)QM (ø12 to ø32), Compact Cylinder, Guide Rod Type

CDQMA32TF-50

Datasheet

General series information

- Guide rod type compact cylinder
- Bore sizes (mm): 12, 16, 20, 25, 32
- Standard strokes (mm): 5 to 100
- 4 times the lateral load resistance of the CQ2K
- Non-rotating accuracy 0.2 or less

Standard specifications

Mounting	A [Double End Tapped [ø32 - ø50]]
Bore Size	Ø32 mm
Stroke	50
Lead Wire or Prewired Connector	0.5 m (Or None in the Case of No Switch)
Number	2 pcs. (Or None in the Case of No Switch)
Magnet	D (Built-in)
Port Thread	TF [G]
Auto Switch	No Switch
Pressure medium	Compressed air
Number of pneumatic connections	2 pcs.
Weight	0.448 Kg

Specifications are subject to change without prior notice and any obligation on the part of the manufacturer.

SMC United Kingdom +34 945184126 sales@smc.uk

Dimensions

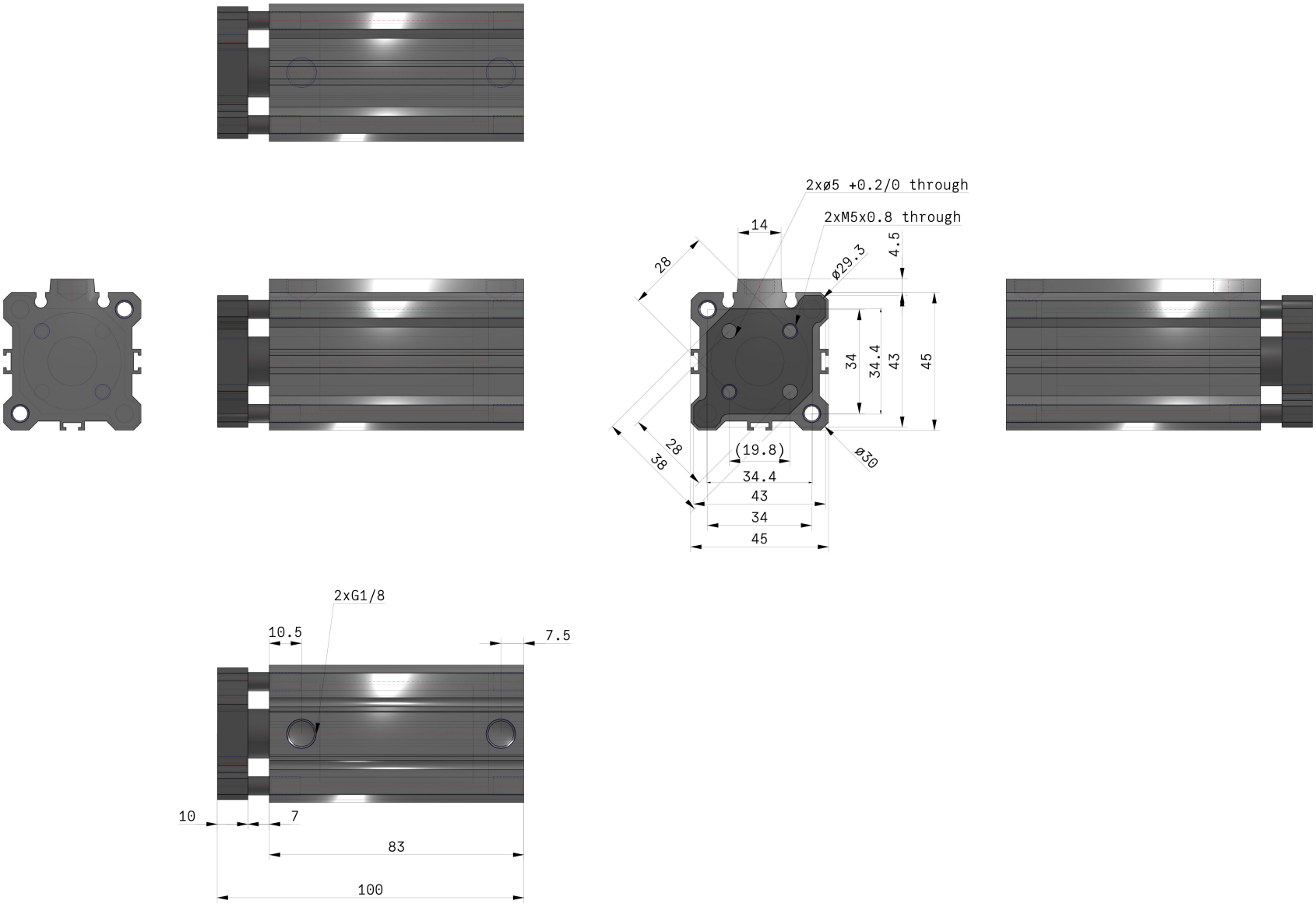

Specifications are subject to change without prior notice and any obligation on the part of the manufacturer.

Additional information

Catalogue	CQM_EU.pdf
Operation manuals	cqm_op_manual_cqm_-om0001c.pdf

Specifications are subject to change without prior notice and any obligation on the part of the manufacturer.

SMC United Kingdom +34 945184126 sales@smc.uk