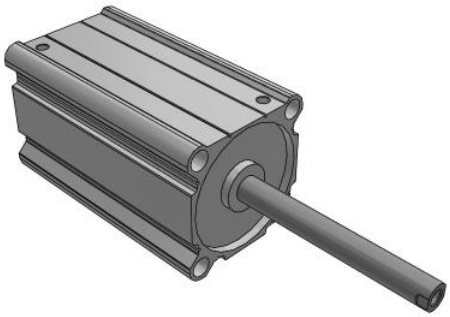

# C(D)Q2WB, Compact Cylinder, Double Acting Double Rod, Large Bore w/Auto Switch Mounting Groove

CDQ2WB200TF-300DCZ

Datasheet

## General series information

- Compact, double acting, double rod, large bore
- Bore sizes (mm): 125, 140, 160, 180, 200
- Standard stroke range (mm): 10 to 300
- Port threads: Rc, NPT, G
- Can mount small auto switches on 4 surfaces.

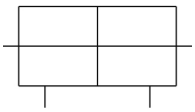

*Double-acting cylinder with double piston rod*

## Standard specifications

| | |
|---|---|
| Magnet | D (Built-in) |
| Bore Size | Ø200 mm |
| Port Thread | TF (G) |
| Stroke | 300 mm |
| Body Option | Standard (Rod End Female Thread) |
| Auto Switch | No Switch |
| Lead Wire or Pre-wired Connector | 0.5 m (Or None in the Case of No Switch) |
| Number | 2 pcs. |
| Rod End Options | None |
| Fluororubber Seal | None |
| Pressure medium | Compressed air |
| Maximum temperature of pressure medium with magnet | 60 ºC |
| Minimum temperature of pressure medium with magnet | -10 ºC |
| Maximum operating pressure | 0.7 MPa |
| Minimum operating pressure | 0.05 MPa |
| Proof pressure | 1.05 Mpa |
| Maximum ambient temperature with magnet | 60 ºC |
| Minimum ambient temperature with magnet | -10 ºC |

*Specifications are subject to change without prior notice and any obligation on the part of the manufacturer.*



**SMC CORPORATION** Zuazobidea 14, 01012, Vitoria-Gasteiz, Álava +34 945184100 +34 945184126 www.smc.eu support.marketingeurope@smc.com

| | |
|---|---|
| Number of pneumatic connections | 2 pcs. |
| Pneumatic input connection | G 1/2 |
| Mode of operation of drive | Double acting |
| Theoretical cylinder force, advance stroke (at 0.5 MPa) | 15,080 N |
| Theoretical cylinder force, return stroke (at 0.5 MPa) | 15,080 N |
| Maximum piston speed | 400 mm/s |
| Piston rod end | Male thread |
| Male thread of rod end | M36 x 1.5 |
| Female thread of rod end | M24 x 3 |
| Minimum piston speed | 20 mm/s |
| Weight | 30.180 Kg |

Specifications are subject to change without prior notice and any obligation on the part of the manufacturer.



SMC CORPORATION Zuazobidea 14, 01012, Vitoria-Gasteiz, Álava +34 945184100 +34 945184126 www.smc.eu support.marketingeurope@smc.com

# Dimensions

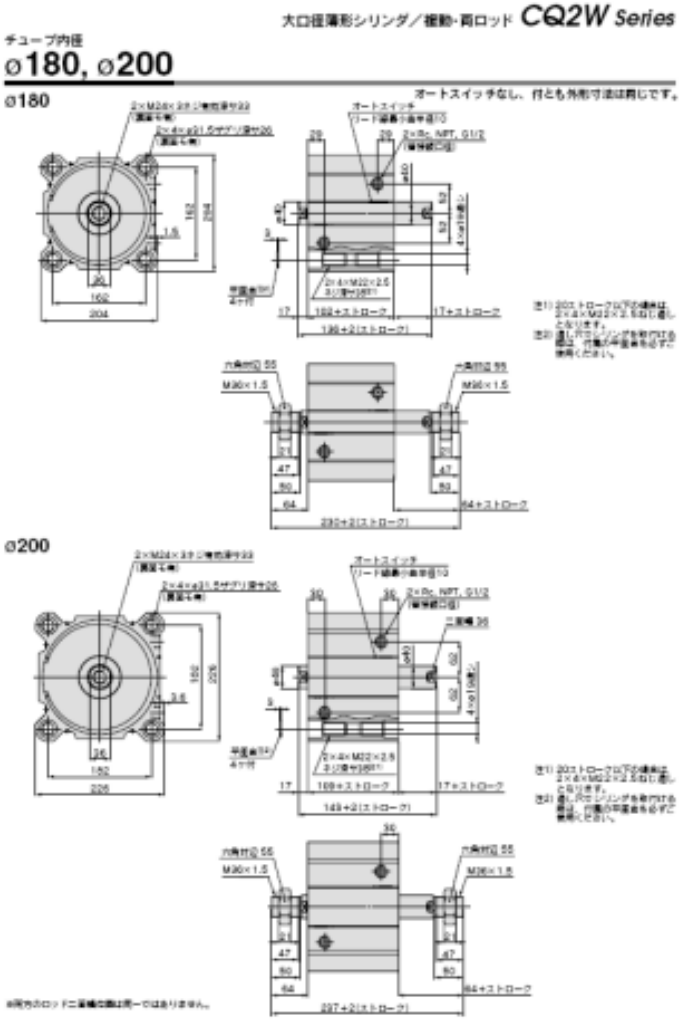


Specifications are subject to change without prior notice and any obligation on the part of the manufacturer.



SMC CORPORATION Zuazobidea 14, 01012, Vitoria-Gasteiz, Álava +34 945184100 +34 945184126 www.smc.eu support.marketingeurope@smc.com

# Constructions

**Standard**

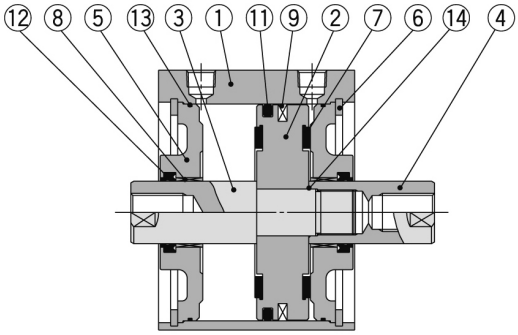


**Rod end male thread**

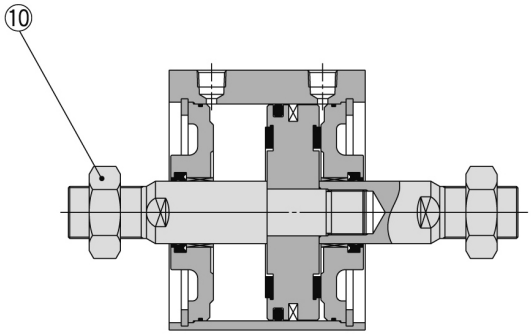


## Component Parts

| No. | Description | Material | Note |
|---|---|---|---|
| 1 | **Cylinder tube** | Aluminum alloy | Hard anodised |
| 2 | **Piston** | Aluminum alloy | Chromated |
| 3 | **Piston rod A** | Carbon steel | Hard chrome plated |
| 4 | **Piston rod B** | Carbon steel | Hard chrome plated |
| 5 | **Rod cover** | Carbon steel | Nickel plated |
| 6 | **Retaining ring** | Carbon tool steel | Phosphate coated |
| 7 | **Bumper** | Resin | |
| 8 | **Bushing** | Bearing alloy | |
| 9 | **Magnet** | — | For CDQ2WB□ only |
| 10 | **Rod end nut** | Carbon steel | Nickel plated |
| 11 | **Piston seal** | NBR | |
| 12 | **Rod seal** | NBR | |
| 13 | **Tube gasket** | NBR | |
| 14 | **Piston gasket** | NBR | |

## Replacement Parts/Seal Kit

| Bore size (mm) | Kit no. | Contents |
|---|---|---|
| **125** | CQ2WB125-PS | Kits include items ⑪, ⑫, ⑬ from the table. |
| **140** | CQ2WB140-PS | |
| **160** | CQ2WB160-PS | |
| **180** | CQ2WB180-PS | |
| **200** | CQ2WB200-PS | |

∗ Seal kit includes ⑪, ⑫, ⑬. Order the seal kit, based on each bore size.
∗ Since the seal kit does not include a grease pack, order it separately.
**Grease pack part no.: GR-S-010** (10 g)

*Specifications are subject to change without prior notice and any obligation on the part of the manufacturer.*



**SMC CORPORATION** Zuazobidea 14, 01012, Vitoria-Gasteiz, Álava +34 945184100 +34 945184126 www.smc.eu support.marketingeurope@smc.com

## Additional information

| | |
|---|---|
| Catalogue | CQ2-Z-D_EU.pdf |
| Operation manuals | OM_CQ2x_OM0002MEN.pdf |

Specifications are subject to change without prior notice and any obligation on the part of the manufacturer.



SMC CORPORATION Zuazobidea 14, 01012, Vitoria-Gasteiz, Álava +34 945184100 +34 945184126 www.smc.eu support.marketingeurope@smc.com