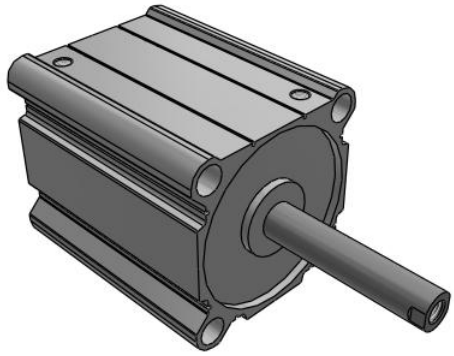

C(D)Q2WB, Compact Cylinder, Double Acting Double Rod, Large Bore w/Auto Switch Mounting Groove

CDQ2WB200TF-175DCZ

Datasheet

General series information

- Compact, double acting, double rod, large bore
- Bore sizes (mm): 125, 140, 160, 180, 200
- Standard stroke range (mm): 10 to 300
- Port threads: Rc, NPT, G
- Can mount small auto switches on 4 surfaces.

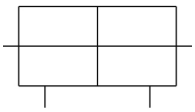

Double-acting cylinder with double piston rod

Standard specifications

Magnet	D (Built-in)
Bore Size	Ø200 mm
Port Thread Type	TF (G)
Stroke	175 mm
Body Option	Standard (Rod End Female Thread)
Auto Switch	No Switch
Lead Wire or Prewired Connector	0.5 m or none in the case of No Switch
Number	2 pcs.
Rod End Options	None
Fluororubber Seal	None
Pressure medium	Compressed air
Maximum temperature of pressure medium with magnet	60 ºC
Minimum temperature of pressure medium with magnet	-10 ºC
Maximum operating pressure	0.7 MPa
Minimum operating pressure	0.05 MPa
Proof pressure	1.05 Mpa
Maximum ambient temperature with magnet	60 ºC
Minimum ambient temperature with magnet	-10 ºC

Specifications are subject to change without prior notice and any obligation on the part of the manufacturer.

SMC CORPORATION Zuazobidea 14, 01012, Vitoria-Gasteiz, Álava +34 945184100 +34 945184126 www.smc.eu support.marketingeurope@smc.com

Number of pneumatic connections	2 pcs.
Pneumatic input connection	G 1/2
Mode of operation of drive	Double acting
Theoretical cylinder force, advance stroke (at 0.5 MPa)	15,080 N
Theoretical cylinder force, return stroke (at 0.5 MPa)	15,080 N
Maximum piston speed	400 mm/s
Piston rod end	Male thread
Male thread of rod end	M36 x 1.5
Female thread of rod end	M24 x 3
Minimum piston speed	20 mm/s
Weight	24.250 Kg

Specifications are subject to change without prior notice and any obligation on the part of the manufacturer.

SMC CORPORATION Zuazobidea 14, 01012, Vitoria-Gasteiz, Álava +34 945184100 +34 945184126 www.smc.eu support.marketingeurope@smc.com

Dimensions

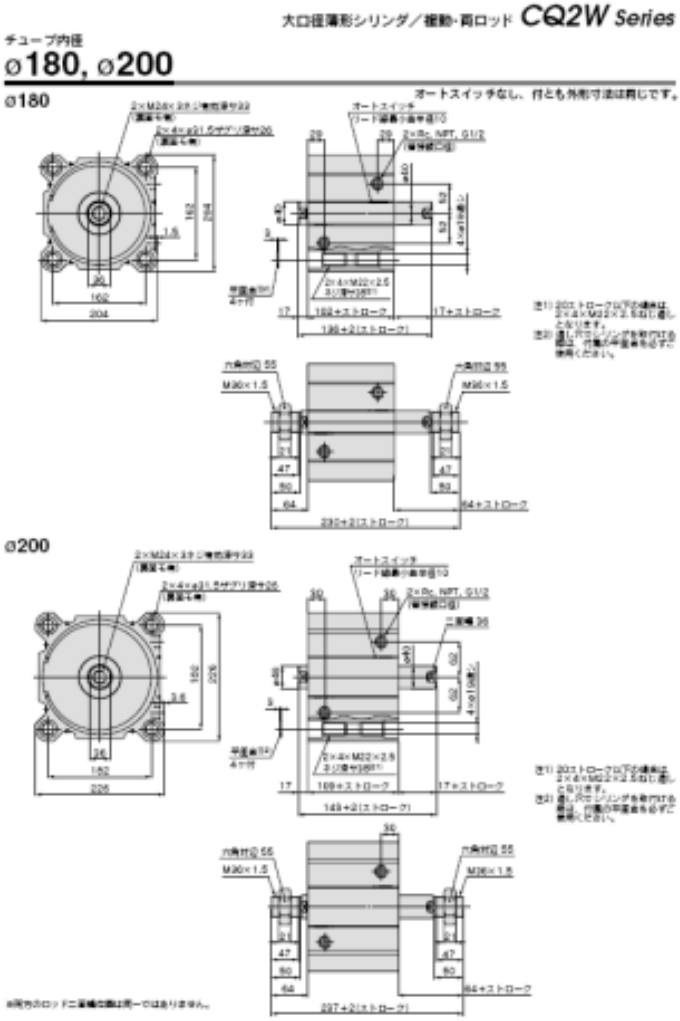

Specifications are subject to change without prior notice and any obligation on the part of the manufacturer.

SMC CORPORATION Zuazobidea 14, 01012, Vitoria-Gasteiz, Álava +34 945184100 +34 945184126 www.smc.eu support.marketingeurope@smc.com

Constructions

Standard

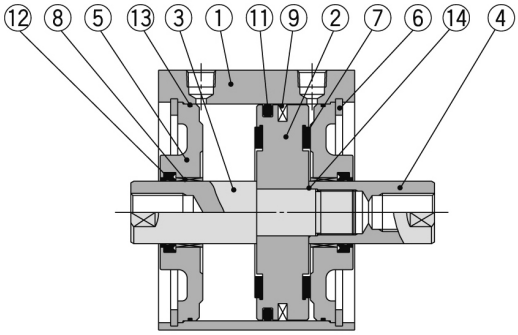

Rod end male thread

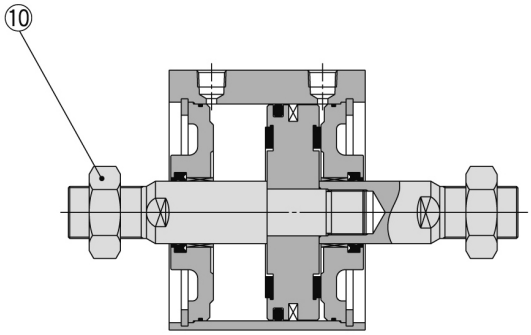

Component Parts

No.	Description	Material	Note
1	**Cylinder tube**	Aluminum alloy	Hard anodised
2	**Piston**	Aluminum alloy	Chromated
3	**Piston rod A**	Carbon steel	Hard chrome plated
4	**Piston rod B**	Carbon steel	Hard chrome plated
5	**Rod cover**	Carbon steel	Nickel plated
6	**Retaining ring**	Carbon tool steel	Phosphate coated
7	**Bumper**	Resin	
8	**Bushing**	Bearing alloy	
9	**Magnet**	—	For CDQ2WB□ only
10	**Rod end nut**	Carbon steel	Nickel plated
11	**Piston seal**	NBR	
12	**Rod seal**	NBR	
13	**Tube gasket**	NBR	
14	**Piston gasket**	NBR	

Replacement Parts/Seal Kit

Bore size (mm)	Kit no.	Contents
125	CQ2WB125-PS	Kits include items ⑪, ⑫, ⑬ from the table.
140	CQ2WB140-PS	
160	CQ2WB160-PS	
180	CQ2WB180-PS	
200	CQ2WB200-PS	

∗ Seal kit includes ⑪, ⑫, ⑬. Order the seal kit, based on each bore size.
∗ Since the seal kit does not include a grease pack, order it separately.
Grease pack part no.: GR-S-010 (10 g)

Specifications are subject to change without prior notice and any obligation on the part of the manufacturer.

SMC CORPORATION Zuazobidea 14, 01012, Vitoria-Gasteiz, Álava +34 945184100 +34 945184126 www.smc.eu support.marketingeurope@smc.com

Additional information

Catalogue	CQ2-Z-D_EU.pdf
Operation manuals	OM_CQ2x_OM0002MEN.pdf

Specifications are subject to change without prior notice and any obligation on the part of the manufacturer.

SMC CORPORATION Zuazobidea 14, 01012, Vitoria-Gasteiz, Álava +34 945184100 +34 945184126 www.smc.eu support.marketingeurope@smc.com