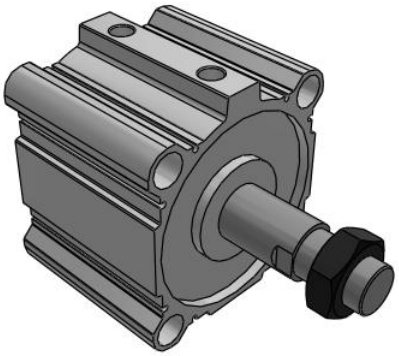

C(D)Q2WB, Compact Cylinder, Double Acting Double Rod, Large Bore w/Auto Switch Mounting Groove

CDQ2WB125TF-40DCMZ

Datasheet

General series information

- Compact, double acting, double rod, large bore
- Bore sizes (mm): 125, 140, 160, 180, 200
- Standard stroke range (mm): 10 to 300
- Port threads: Rc, NPT, G
- Can mount small auto switches on 4 surfaces.

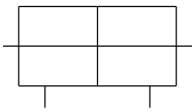

Double-acting cylinder with double piston rod

Standard specifications

Magnet	D (Built-in)
Bore Size	Ø125 mm
Port Thread Type	TF (G)
Stroke	40 mm
Body Option	M (Rod End Male Thread)
Auto Switch	No Switch
Lead Wire or Prewired Connector	0.5 m or none in the case of No Switch
Number	2 pcs.
Rod End Options	None
Fluororubber Seal	None
Pressure medium	Compressed air
Maximum temperature of pressure medium with magnet	60 ºC
Minimum temperature of pressure medium with magnet	-10 ºC
Maximum operating pressure	1.0 MPa
Minimum operating pressure	0.05 MPa
Proof pressure	1.5 MPa
Maximum ambient temperature with magnet	60 ºC
Minimum ambient temperature with magnet	-10 ºC

Specifications are subject to change without prior notice and any obligation on the part of the manufacturer.

SMC CORPORATION Zuazobidea 14, 01012, Vitoria-Gasteiz, Álava +34 945184100 +34 945184126 www.smc.eu support.marketingeurope@smc.com

Number of pneumatic connections	2 pcs.
Pneumatic input connection	G 3/8
Mode of operation of drive	Double acting
Theoretical cylinder force, advance stroke (at 0.5 MPa)	5,627 N
Theoretical cylinder force, return stroke (at 0.5 MPa)	5,627 N
Maximum piston speed	500 mm/s
Piston rod end	Male thread
Male thread of rod end	M30 x 1.5
Female thread of rod end	M22 x 2.5
Minimum piston speed	50 mm/s
Weight	6.740 Kg

Specifications are subject to change without prior notice and any obligation on the part of the manufacturer.

SMC CORPORATION Zuazobidea 14, 01012, Vitoria-Gasteiz, Álava +34 945184100 +34 945184126 www.smc.eu support.marketingeurope@smc.com

Dimensions

CQ2W Series

チューブ内径

ø125～ø160

標準形(通し穴タイプ)／C□Q2WB

オートスイッチなし、付とも外形寸法は同じです。

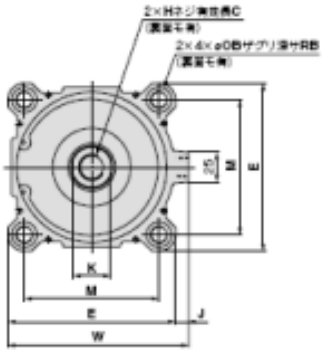

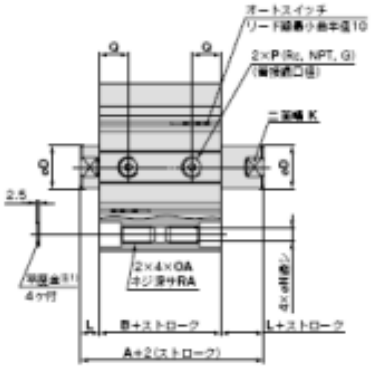

ロッド先端おねじ

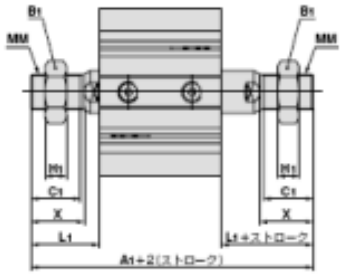

ロッド先端おねじの場合 (mm)

チューブ内径 (mm)	A1	B1	C1	H1	L1	MM	X
125	199	46	42	18	58	M30×1.5	45
140	199	46	42	18	58	M30×1.5	45
160	219	55	47	21	64	M36×1.5	50

(mm)

チューブ内径	標準ストローク範囲	A	B	C注2)	D	E	H	J	K	L	M	N	OA	OB	P	Q	RA	RB	W
125	10, 20, 30, 40, 50	115	83	30(22.5)	36	142	M22×2.5	11	32	16	114	12.5	M14×2	21.2	3/8	24.5	25	18.4	153
140	75, 100, 125, 150	115	83	30(22.5)	36	158	M22×2.5	10	32	16	128	12.5	M14×2	21.2	3/8	24.5	25	18.4	168
160	175, 200, 250, 300	125	91	33(26.5)	40	176	M24×3	10	36	17	144	14.5	M16×2	24.2	3/8	27.5	28	21.2	186

注1) 通し穴でシリンダを取付ける際は、付属の平座金を必ずご使用ください。
注2) ( )内数値は、10ストロークのみの値(片側の有効長さを示します。
※両方のロッド二面幅寸法は同一ではありません。

Specifications are subject to change without prior notice and any obligation on the part of the manufacturer.

SMC CORPORATION Zuazobidea 14, 01012, Vitoria-Gasteiz, Álava +34 945184100 +34 945184126 www.smc.eu support.marketingeurope@smc.com

Constructions

Standard

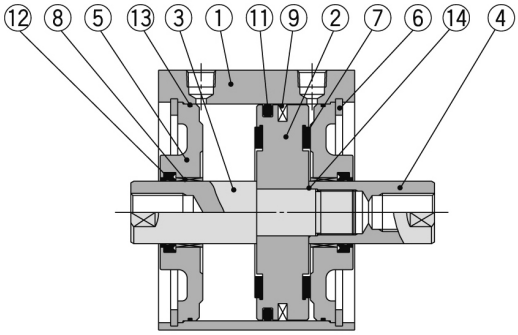

Rod end male thread

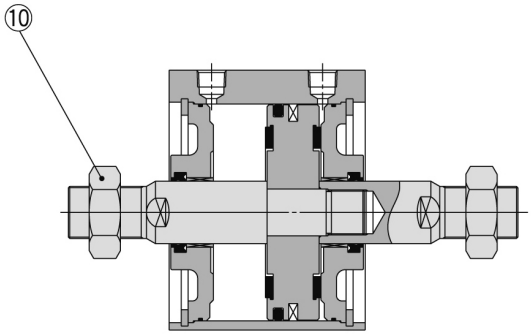

Component Parts

No.	Description	Material	Note
1	**Cylinder tube**	Aluminum alloy	Hard anodised
2	**Piston**	Aluminum alloy	Chromated
3	**Piston rod A**	Carbon steel	Hard chrome plated
4	**Piston rod B**	Carbon steel	Hard chrome plated
5	**Rod cover**	Carbon steel	Nickel plated
6	**Retaining ring**	Carbon tool steel	Phosphate coated
7	**Bumper**	Resin	
8	**Bushing**	Bearing alloy	
9	**Magnet**	—	For CDQ2WB□ only
10	**Rod end nut**	Carbon steel	Nickel plated
11	**Piston seal**	NBR	
12	**Rod seal**	NBR	
13	**Tube gasket**	NBR	
14	**Piston gasket**	NBR	

Replacement Parts/Seal Kit

Bore size (mm)	Kit no.	Contents
125	CQ2WB125-PS	Kits include items ⑪, ⑫, ⑬ from the table.
140	CQ2WB140-PS	
160	CQ2WB160-PS	
180	CQ2WB180-PS	
200	CQ2WB200-PS	

∗ Seal kit includes ⑪, ⑫, ⑬. Order the seal kit, based on each bore size.
∗ Since the seal kit does not include a grease pack, order it separately.
Grease pack part no.: GR-S-010 (10 g)

Specifications are subject to change without prior notice and any obligation on the part of the manufacturer.

SMC CORPORATION Zuazobidea 14, 01012, Vitoria-Gasteiz, Álava +34 945184100 +34 945184126 www.smc.eu support.marketingeurope@smc.com

Additional information

Catalogue	CQ2-Z-D_EU.pdf
Operation manuals	OM_CQ2x_OM0002MEN.pdf

Specifications are subject to change without prior notice and any obligation on the part of the manufacturer.

SMC CORPORATION Zuazobidea 14, 01012, Vitoria-Gasteiz, Álava +34 945184100 +34 945184126 www.smc.eu support.marketingeurope@smc.com